Energy Conversion and Management 120 (2016) 430–448

Contents lists available at ScienceDirect

Energy Conversion and Management

journal homepage: www.elsevier.com/locate/enconman

Review

A review on sizing methodologies of photovoltaic array and storage battery in a standalone photovoltaic system

Tamer Khatib [a,*], Ibrahim A. Ibrahim [b], Azah Mohamed [b]

[a] Energy Engineering and Environment Department, An-Najah National University, Nablus, Palestine
[b] Department of Electrical, Electronic and Systems Engineering, Universiti Kebangsaan Malaysia, Selangor, Malaysia

ARTICLE INFO

Article history:
Received 29 February 2016
Received in revised form 2 May 2016
Accepted 3 May 2016
Available online 10 May 2016

Keywords:
Photovoltaic system
SAPV
Optimal size
Storage battery

ABSTRACT

The reliance of future energy demand on standalone PV system is based on its payback period and particular electrical grid parity prices. This highlights the importance for optimum and applicable methods for sizing these systems. Moreover, the designers are being more sensitive toward simple and reliable sizing models for standalone PV system. This paper proposes a review on important knowledge that needs to be taken into account while designing and implementing standalone PV systems. Such a knowledge includes configurations of standalone photovoltaic system, evaluation criteria for unit sizing, sizing methodologies. Moreover, this review provides highlights on challenges and limitations of standalone PV system size optimization techniques.

© 2016 Elsevier Ltd. All rights reserved.

Contents

1. Introduction . . . 431
2. Standalone PV system configurations . . . 432
   2.1. DC coupled configuration . . . 432
   2.2. AC coupled configuration . . . 433
   2.3. Hybrid DC–AC coupled configuration . . . 433
3. Evaluation criteria for sizing a standalone PV system . . . 433
   3.1. Technical parameters . . . 434
      3.1.1. Loss of power supply probability . . . 434
      3.1.2. Loss of load probability . . . 434
      3.1.3. Loss of load expected . . . 434
      3.1.4. Equivalent loss factor . . . 434
      3.1.5. Total energy loss . . . 434
      3.1.6. State of charge . . . 434
      3.1.7. Level of autonomy . . . 435
   3.2. Economic parameters . . . 435
      3.2.1. Net present value . . . 435
      3.2.2. Annualized cost of a system . . . 435
      3.2.3. Total life cycle cost . . . 435
      3.2.4. Capital recovery factor . . . 435
      3.2.5. Average generation cost of energy . . . 435
      3.2.6. Levelized cost of energy . . . 435
   3.3. Social and political parameters . . . 435
      3.3.1. Social acceptance . . . 436
      3.3.2. Portfolio risk . . . 436
4. Methods for sizing a standalone PV system . . . 436

* Corresponding author.
E-mail addresses: t.khatib@najah.edu (T. Khatib), ibrahim.a.ibrahim@hotmail.com (I.A. Ibrahim), azah_mohamed@ukm.edu.my (A. Mohamed).

http://dx.doi.org/10.1016/j.enconman.2016.05.011
0196-8904/© 2016 Elsevier Ltd. All rights reserved.

4.1. Intuitive methods for optimum sizing a standalone PV system . . . 436
4.2. Numerical methods for optimum sizing a standalone PV system . . . 438
4.3. Analytical methods for optimum sizing a standalone PV system . . . 440
4.4. Commercial software tools for optimum sizing a standalone PV system . . . 443
4.5. Artificial intelligence methods for optimum sizing a standalone PV system . . . 444
4.6. Hybrid methods for optimum sizing a standalone PV system . . . 445
4.7. Comparison of optimal sizing methods of a standalone PV system . . . 446
5. Findings . . . 446
6. Conclusion . . . 446
Acknowledgment . . . 447
References . . . 447

1. Introduction

Global warming is primarily a phenomenon of too much heat-trapping gases in the atmosphere. Carbon dioxide (CO_2) is recognized to be the most abandon heat-trapping gas on the earth due to the increased use of fossil fuel. In the meanwhile, conventional power plants are overloading the atmosphere with CO_2 and other heat-trapping gases which substantially contribute to global warming. As a result, today's emission of such gases is expected to remain stuck in the space for a century before it gradually vanishes, but approximately 20% of CO_2 will still be in the atmosphere about 800 years from now. CO_2 levels have risen 36% in the last 250 years, with half of this amount occurring only in the last three decades [1]. Therefore, if no action is taken to cut down the rate of CO_2 production in the atmosphere, its concentration will exceed three times of the concentration of CO_2 during the pre-industrial era. Thus, it will be resulting in a warming of 3–10 °C according to the latest climate projections by the year 2100 [2]. In addition to steadily raising the planet's temperature, these emissions significantly affect our health and climate.

It is noted that coal emits between 1.4 and 3.6 pounds of CO_2 equivalent per kilowatt-hour (CO_2E/kW h), and natural gas emits between 0.6 and 2 pounds of CO_2E/kW h. On the other hand, wind emits only 0.02 –0.04 pounds of CO_2E/kW h, solar emits 0.07 –0.2 pounds of CO_2E/kW h, geothermal emits between 0.1 and 0.2 pounds of CO_2E/kW h, and hydroelectric emits between 0.1 and 0.5 pounds of CO_2E/kW h [3,4]. These data confirm that renewable energy sources emit very little of global gas emissions as compared to other energy sources.

PV power generation system is one of the most popular uses of the direct solar energy and its installation is rapidly growing because it is considered as a clean and environmentally friendly source of energy. A PV power generation system contains a number of PV modules that converts solar radiation into direct electrical current using semiconducting materials. Technological developments and improvements have always been employed in PV systems science. For example, PV systems have been well tested in terrestrial and space applications [4]. PV systems are considered quite reliable and secure but the high capital cost of PV systems is the primary deterrent to increase its use. However, PV systems can still be cost effective in some remote off-grid locations as compared to the cost of running power lines and the subsequent continual electric charges. Presently, some utilities have established PV centralized generating stations as a form of green power option with an addition of a small fee on the customer's monthly utility bill for the construction of additional PV installations [5]. Three types of PV systems are generally used, namely, standalone PV system, hybrid PV system, and grid-connected PV system. Traditionally, PV systems have been applied mainly for standalone PV and hybrid PV systems in rural and remote areas, as a suitable power generation system that could provide power without too much maintenance and operational costs. Currently, grid-connected PV systems are widely used as distributed generation units in power systems. On the other hand, standalone PV systems installation can be configured in the form of either centralized or distributed systems. The centralized standalone PV systems are usually located at load's center and supply power to all consumers while the distributed standalone PV systems supply power to consumers individually. The advantage of the centralized standalone PV system is that its size may be smaller than the distributed system since diversity factor is taken into consideration [6]. As for commercial standalone PV systems, it can be classified based on its power rating and application. The power ratings of the existing standalone PV systems are typically 0.5–20 kW, and it supplies power to various loads. Typical loads of standalone PV system are residential loads, jungle long-houses, telecom installations, irrigation pump systems, and lighting loads.

Standalone PV system must be designed optimally to cover the desired load demand at a defined level of availability. Meanwhile, optimum standalone PV system sizing process is mainly depending on meteorological data such as solar radiation and ambient temperature. The importance of meteorological variables in standalone PV system sizing process that is the output energy of these systems strongly depends on the availability of these data [6]. Currently, research works are conducted to develop sizing optimization techniques of standalone PV system, so that number of PV modules, capacity of storage batteries, and the size of inverter are optimally designed and selected. Moreover, standalone PV system needs the knowledge of some parameters in order to get an optimum design such as the data source natural, system's components mathematical models, sizing methodologies, government energy policies, and end user requirements. These data help designers to improve system's efficiency and reliably so as to meet the end user requirements at a desired level of availability and an acceptable range of cost [7].

Climatic condition is an indispensable indicator for determining the availability and range of meteorological data such as solar radiation and ambient temperature at a certain location. These meteorological data vary continuously with time. To get the benefits of the solar radiation and ambient temperature at a particular location, a characterization is needed for these meteorological data in a specific way. Meteorological data can be in the form of time series or statistical data. The time series meteorological data is in the form of hourly weather data of solar radiation and ambient temperature [8–10]. The advantage of the time series data is that it expresses the variability of parameters so that it gives a more accurate performance of PV systems while its disadvantage is that it is difficult to obtain location to location data at remote locations. The statistical meteorological data is a synthetically weather data generated from the monthly average data or calculated solar radiation and ambient temperature from a site using statistical method [11–13]. The advantage of statistical meteorological data is that it can be used if data is unavailable or if there is a missing data which reduces the computational attempts in simulation applications.

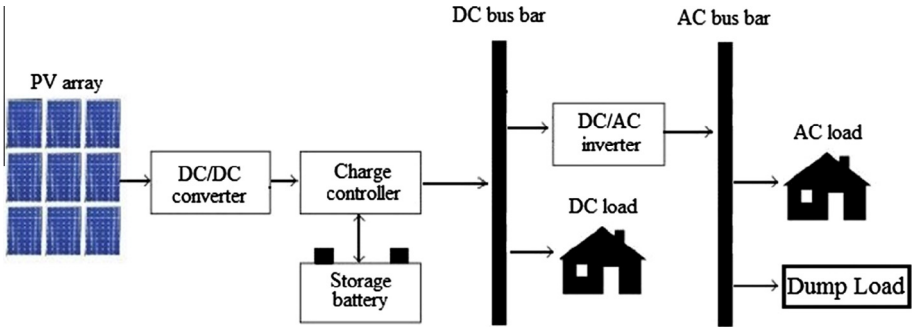

Fig. 1. A typical basic components of a standalone PV system.

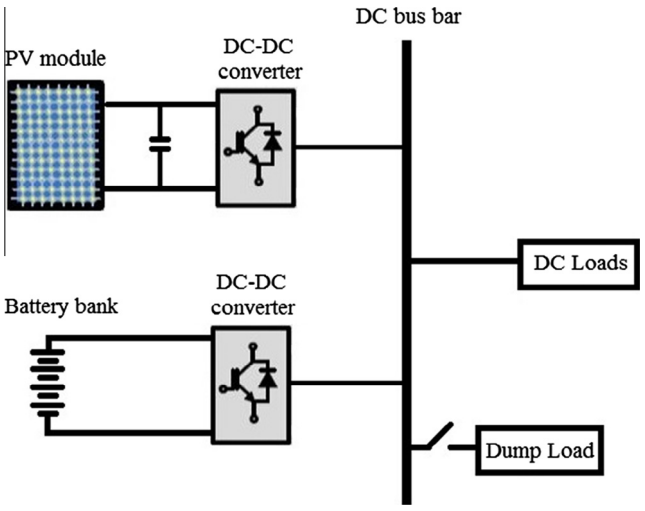

Fig. 2. A DC coupled configuration of a standalone PV system.

However, its disadvantage is that the performance of PV systems is less sensitive on variation of these parameters.

In this paper, various important issues related to optimal sizing of PV array and the storage battery in a standalone PV system are discussed. Section 2 explains various evaluation criteria for optimally designing of a standalone PV system. Section 3 reviews the existing sizing methodologies for designing a standalone PV system. Finally, Section 4 highlights challenges for sizing a standalone PV system with conclusion in Section 5.

2. Standalone PV system configurations

A typical standalone PV system consists of a PV generator, storage battery, DC/DC converter, charge controller, inverter, AC and/or DC loads and damping load as illustrated in Fig. 1. A standalone PV system has no connection with an electric utility grid. A PV generator is usually consisted of a PV array that is composed of many PV modules, while each PV module is composed of many solar cells. The storage battery stores energy when the power produced by the PV generator exceeds the required load demand and emancipates it back when the PV generator production is insufficient. The load demand for a standalone PV system can be of many types, DC and/or AC load. The power conditioning unit functions as an interface between all the PV system's components, provides control, and gives protection for the system. In general, the frequently used components in the power conditioning unit are DC/DC converter, charge controller and inverter [14]. In addition, the damping load is needed for damping the excess energy which is produced in case of the energy generated by PV array is more than the load demand and the storage batteries are fully charged, simultaneously.

2.1. DC coupled configuration

This configuration has only one DC bus bar while the energy sources are connected to the bus bar by proper power electronics

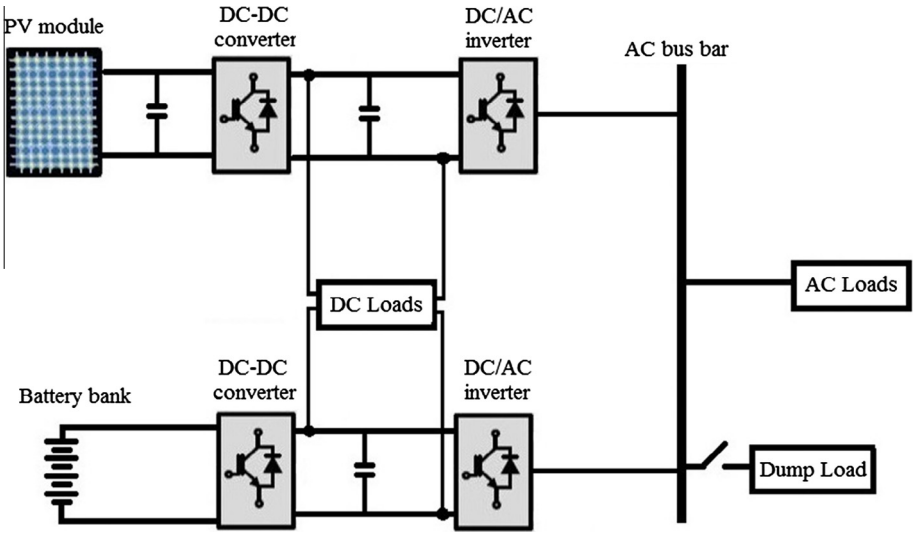

Fig. 3. An AC coupled configuration of a standalone PV system.

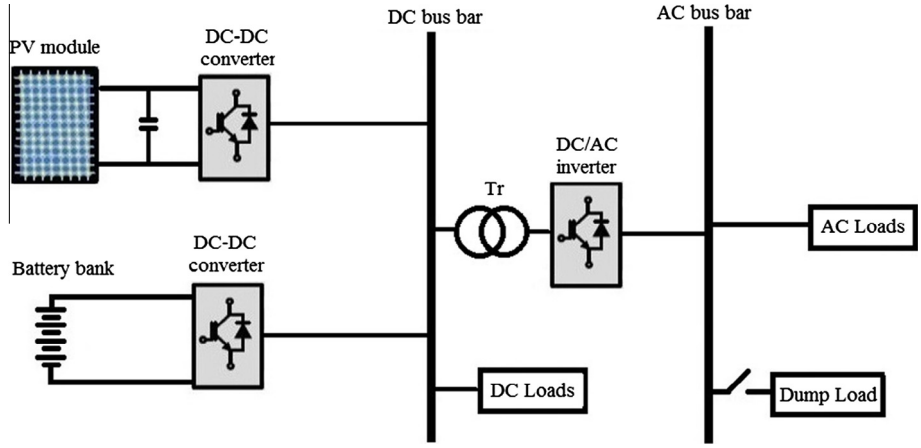

Fig. 4. The hybrid DC–AC coupled configuration of a standalone PV system.

Table 1
Summary of standalone PV system configurations.

Configurations	Advantages	Disadvantages	Ref.
DC coupled configuration	This configuration is simple as synchronization is not required for integrating various energy sources to the system. However, the reactive power is not needed for security, self-healing, and reliability which excludes the power quality problems. Moreover, DC/AC or AC /DC power conversion stages can be eliminated from the energy sources and loads which improves the efficiency, because of less power conversion; and decreases the cost and size of the system	DC coupled configuration needs further investigations on the proper operating range of DC voltage and protection apparatus for DC appliances	[15]
AC coupled configuration	The AC coupled configuration is the most suitable configuration for the present industrial applications as most of the AC appliances may directly connected to the AC bus bar. In addition, established protections and standards are easier than the DC coupled configuration	This configuration needs to synchronize the energy sources output with the AC bus bar. However, using DC/AC convertors are increased the system cost and the power losses. Moreover, it has the power quality problems as the needed for reactive power is inherent demerit	[16,17]
Hybrid DC–AC coupled configuration	The application of hybrid DC–AC coupled configuration allows the elimination of many energy conversion stages, which would decrease in component costs and power losses, and increase in system reliability. As a result, this configuration has higher energy efficiency and lower cost as compared to DC and AC coupled configurations	Energy management, control, and operation of a hybrid DC–AC coupled configuration are relatively more complicated than those of an individual DC or AC coupled configurations	[18]

interfacing devices. The energy sources in this configuration such as PV generator and storage battery which producing DC power are directly connected to DC bus bar using DC/DC convertors so as to maintain constant DC voltage level. However, the DC load and damp load are directly connected to the DC bus bar. Meanwhile, the DC coupled configuration is used for suppling digital and low voltage DC loads. A DC coupled configuration is given in Fig. 2.

2.2. AC coupled configuration

The AC coupled configuration is illustrated in Fig. 3. In this configuration, the energy sources are connected to AC bus bar through suitable power electronics devices. Meanwhile, the storage system is connected to AC bus bar through a bidirectional converter. AC loads are directly connected to AC bus bar while DC loads are connected to energy sources through DC/DC converter or connected to the AC bus bar using DC/AC convertor. This configuration is widely used in high frequency applications such as in heavy industrial loads airplanes, space stations and sub-marines.

2.3. Hybrid DC–AC coupled configuration

The hybrid DC–AC coupled configuration has both DC and AC bus bars. In this configuration, the DC energy sources are connected to DC bus bar by proper interfacing power electronic circuits. The AC bus bar is connected to the AC bus bar by using DC/AC inverter. However, DC loads are directly served through DC bus bar. While, AC loads receive energy directly from the AC bus bar. The hybrid DC–AC coupled configuration is presented in Fig. 4. The advantages and disadvantages of the standalone PV system configurations are listed in Table 1.

3. Evaluation criteria for sizing a standalone PV system

Selecting the evaluation criteria for designing standalone PV system for a required locality is one of the important works for obtaining optimum PV design [19]. Beccali et al. [20] used ELECTRE to assess an action plan that can handle different renewable energy techniques at the regional level. Goletsis et al. [21] applied approach of energy planning for ranking the energy projects. Topcu and Ulengin [22] construed possible energy scenarios based on environmental, economical, physical, political, and other not controllable aspects. Ribeiro et al. [23] developed a ranking tool for different scenarios that is called multi-criteria decision analysis. This ranking tool is based on criteria covering technical, economic, environmental, quality of life, and job market aspects. Thus, to address the evaluation criteria, various parameters are taken into consideration in designing standalone PV system as shown in Fig. 5.

These performance parameters are used to evaluate and estimate the availability and feasibility of a standalone PV system

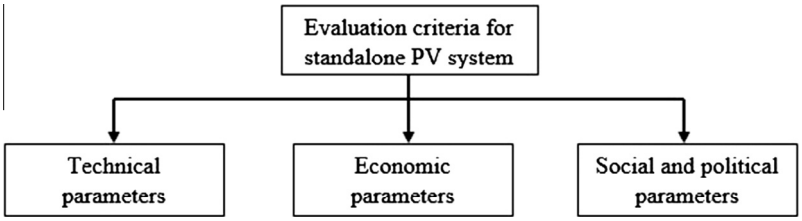

Fig. 5. Evaluation criteria for standalone PV system size optimization.

which can help designers in developing a suitable system for a given application. Several of these parameters are described as follows:

3.1. Technical parameters

Considering the fact that solar radiation values are random and fluctuated in nature, the determination of the standalone PV system's availability becomes an essential issue for designers to ensure that the system can meet the load demand.

3.1.1. Loss of power supply probability

Loss of power supply probability (LPSP) is defined as the percentage of power supply that it is not able to satisfy the load demand. It indicates the reliability of power supply to load. LPSP is given by the ratio of summation of all loss power supply, $LPS(t)$ at a specific time period (t) over the summation of load demand, $LD(t)$ at the same time period (t). LPSP is mathematically expressed as [24,25]:

$$\mathrm{LPSP} = \frac{\sum_{t=1}^{N} LPS(t)}{\sum_{t=1}^{N} LD(t)} \tag{1}$$

In which,

$$LPS(t) = LD(t) - E_{Sys}(t) \tag{2}$$

where $E_{Sys}(t)$ is the total generated energy from the system.

Meanwhile, if LPSP is equal to 0, it means that the load demand is totally satisfied at a specific time period (t). On the other hand, if LPSP is not equal 0, it means that the load demand is not totally satisfied. For LPSP between 0 and 1, it means that the supplied power cannot fully cover the load demand because of insufficient solar radiation and the battery storage capacity.

3.1.2. Loss of load probability

Loss of load probability (LLP) indicates how often a system is not being able to satisfy the load demand or the mean load percentage not met by the system. It is defined as the ratio of total energy deficit to the total load demand during a specific time period. LLP can be expressed as [26],

$$LLP = \frac{\sum_{t}^{T} DE(t)}{\sum_{t}^{T} P_{load}(t)\Delta t} \tag{3}$$

where $DE(t)$ is the deficit energy which is defined as the disability of the system to supply power to the load at a specific time period, $P_{load}(t)$ is the load demand at the same time period, and Δt is the time period for both terms.

3.1.3. Loss of load expected

Loss of load expected (LOLE) or also known as expected energy not supplied is defined as the amount of energy not provided to load demand when the load demand exceeds the energy generation from the system due to generating capacity deficiency, shortage in energy supplies and/or sudden increase in load demand. LOLE is given by Upadhyay and Sharma [27] as:

$$LOLE = \sum_{t=1}^{T} E[LOL(t)] \tag{4}$$

where $E[LOL(t)]$ is the expected value of loss of load at a specific time period t which can be estimated by,

$$E[LOL] = \sum_{s \in S} T(s) f(s) \tag{5}$$

where s is the current state of loss of load, S is the set of all the loss of load possible states, $T(s)$ is the duration of loss of load, and $f(s)$ is the probability of meeting the current state of loss of load.

3.1.4. Equivalent loss factor

Equivalent loss factor (ELF) term contains the needed information about load outages for both number and magnitude of them which is defined as the ratio of effective time period in hours of load outage to the total operation time in hours. ELF is formulated as [28]:

$$ELF = \frac{1}{T} \sum_{t=1}^{H} \frac{E(Q(t))}{D(t)} \tag{6}$$

where T is the length of time, $Q(t)$ is the amount of load demand that is not met at time t, and $D(h)$ is the power demand at time t. However, the accepted value of ELF of a standalone PV system in remote areas is when ELF < 0.1. The value of ELF = 0.0001 is aimed by electricity suppliers in the developed countries [29].

3.1.5. Total energy loss

Total energy loss (TEL) indicates the energy loss due to the extra power generated from a standalone energy system. TEL should be minimized by imposing the regulation in which power generation should not exceed the desired threshold at an analyzed time period T, which is assumed to be 8760 h [30]. TEL is given by,

$$\mathrm{TEL} = \begin{cases} \sum_{t=1}^{T} (E_E - LD(t)), & \text{if } LD(t) < E_E \\ 0, & \text{otherwise} \end{cases} \tag{7}$$

$$0 < TEL \leqslant THR$$

where E_E is the extra generated energy from the system, $LD(t)$ is the load demand, and THR is a specific threshold over the time t which is strongly depending on the system energy production. However, the extra energy from the system may be damped using a damping load in a standalone PV system or may be sold to the grid in the case of grid connected PV system.

3.1.6. State of charge

State of charge (SOC) of a storage battery indicates the amount of energy that can be stored in a system for the purpose of selecting a suitable battery capacity for a given system. It can be estimated by using a simplified mathematical equation as [31]:

$$SOC(t+1) = SOC(t)\sigma + I_{bat}(t)\Delta t \eta(I_{bat}(t)) \tag{8}$$

where σ is the self-discharge battery rate, $I_{bat}(t)$ is the battery current which may be charging or discharging current, Δt is the sampling time period, and η is the charging efficiency.

3.1.7. Level of autonomy

Level of autonomy (LA) is the time ratio which expressed the percentage of load covered based on the operational time of the system. LA can be presented as one minus the result of number of hours of load not met by the system to the system's operational time. It is given by [32]:

$$LA = 1 - \frac{T_{LOL}}{T_{Operation}} \tag{9}$$

where T_{LOL} is the total number of hours that load is not totally covered, and $T_{Operation}$ is the total number of system operation hours.

3.2. Economic parameters

The general concept of optimum design is to design a standalone PV system that can meet the load demand at a defined level of security, and at minimum capital and operational costs. Thus, economic aspect is of concern in designing a standalone PV system and the economic parameters are given as follows:

3.2.1. Net present value

Net present value (NPV) can be calculated by adding the present amount of incomes and subtracting the present amount of outcomes during the lifetime of a standalone PV system. NPV can be expressed as [33]:

$$NPV = \sum NPV_{income} + \sum NPV_{end} - C_{investment} - \sum NPV_{O\&M} - \sum NPV_r \tag{10}$$

where NPV_{income} is the present discounted amount of income from the sold electricity, NPV_{end} is the present discounted amount of income from the residual amount of the system components at the end lifetime of the system, $C_{investment}$ is the initial amount of total investment cost, $NPV_{O\&M}$ is the present discounted amount of the future operational and maintenance costs during the lifetime of the system, and NPV_r is the present discounted amount of the replacement costs for replacing components during the system's lifetime.

3.2.2. Annualized cost of a system

The annualized cost of a system (ACS) for a standalone PV system is the summation of annualized capital system cost, C_{acsc}, annualized operational and maintenance costs, $C_{ao\&am}$, and the annualized replacement cost, C_{arc} [25] and it is given by,

$$ACS = C_{acsc} + C_{ao\&am} + C_{arc} \tag{11}$$

3.2.3. Total life cycle cost

Total life cycle cost (TLCC) is defined as the summation of the net present values of all the amount of the system costs such as the capital cost, maintenance and operation costs, replacement costs, etc. TLCC can be mathematically expressed as [34]:

$$\begin{aligned} TLCC = {} & \frac{\sum_{i=1}^{Npv} i(C_{PVi} + L_s M_{PVi})}{L.T_{PV}} \\ & + \frac{\sum_{j=1}^{JBat} jC_{Batj}(1 + Y_{Batj}) + M_{Batj}(L_s - Y_{Batj})}{L.T_{Bat}} \\ & + \frac{\sum_{m=1}^{Mchc} mC_{chcm}(1 + Y_{chcm}) + M_{chcm}(L_s - Y_{chcm})}{L.T_{chc}} \\ & + \frac{C_{Inv}(1 + Y_{Inv}) + M_{Inv}(L_s - Y_{Inv})}{L.T_{Inv}} \end{aligned} \tag{12}$$

where Npv is the total number of PV modules in the system, C_{PVi} is the capital cost of a PV module, L_s is the operation time period of the system in years, M_{PVi} is the maintenance cost of one PV module per year, $L.T_{PV}$ is the total lifetime period for a PV array, $JBat$ is the total number of storage batteries in the system, C_{Batj} is the capital cost of one storage battery, Y_{Batj} is the expected numbers of the storage battery replacement during the system lifetime, M_{Batj} is the maintenance cost of one storage battery per year, $L.T_{Bat}$ is the total lifetime period for storage battery, $Mchc$ is the total number of charge controllers in the system, C_{chcm} is the capital cost of a charge controller, Y_{chcm} is the expected number of charger controller n replacement during the system lifetime, M_{chcm} is the maintenance cost of one charge controller per year, $L.T_{chc}$ is the total lifetime period for charge controller, C_{Inv} is the capital cost of an inverter, Y_{Inv} is the expected number of inverter replaced during the system lifetime, M_{Inv} is the maintenance cost of one inverter per year, and $L.T_{Inv}$ is the year lifetime for an inverter.

3.2.4. Capital recovery factor

Lazou and Papatsoris [35] defined capital recovery factor (CRF) as a ratio of the amount of constant annuity costs to the total present value of all the costs received for a given time in years. Thus, CRF can be expressed as,

$$\mathrm{CRF} = \frac{i(1+i)^n}{(1+i)^n - 1} \tag{13}$$

where i represents the discount rate when the payment comes from the future to the present and it represents the interest rate when the payment amount goes from present to the future, and is the lifetime of the system in years.

3.2.5. Average generation cost of energy

The average generation cost of energy, ith C_{av} is the aggregation of the average energy generation costs of all the components in a standalone PV system. C_{av} is given by Ramakumar and Hughes [36]:

$$C_{av} = \frac{\left[((1+r)^n + m)/((1+r)^n - 1)\right]\sum_i P_i R_i}{(87.6)\sum_i P_i R_i K_i} \tag{14}$$

where i is summation index to involve all system's components, K_i is the load factor for the ith component, m is the operational and maintenance charge rate per unit for ith the component, n is the amortization time period in years for the ith component, P_i is the capital cost in ($/kW h) for the ith component, and R_i is the rating in kilowatts of the component.

3.2.6. Levelized cost of energy

The levelized cost of energy (LCE) is defined as the ratio of the total annual cost of the system components to the total annual energy generated by a standalone PV system, and it is given as [35,37]:

$$\mathrm{LCE} = \frac{TAC}{E_{tot}} \tag{15}$$

where TAC is the total annualized system cost, and E_{tot} is the total annual energy generated by the system.

3.3. Social and political parameters

There are many social and political decisions that need to be considered when designing renewable energy sources because it may affect the system design at the installed location. These social and political parameters are described as follows:

3.3.1. Social acceptance

The social acceptability evaluation criteria must be taken into consideration when designing a standalone PV system such as social resistance for installing renewable energy sources. In this aspect, the use of land and other visual effects are considered as negative social impacts. Stigka et al. [38] highlighted the public acceptance in using renewable energy sources as a replacement for conventional energy sources.

3.3.2. Portfolio risk

This term minimizes the disclosure of fuel prices instability which is conducting the social and political resolutions [39] and it is given by,

$$PR = \sum_{t\in T}\left[\sum_{j\in F}\alpha_{jt}\sum_{n\in N_j} gn_{nt}\right] \tag{16}$$

where α_{jt} is the historical coefficient of the fuel type j price changes during the time period, t and gn_{nt} is the aggregation of the energy produced by the n non-renewable sources units during time, t.

4. Methods for sizing a standalone PV system

In general, in determining optimal sizing of a PV system, a specific area for a standalone PV system is first defined, and then meteorological data such as solar radiation and ambient temperature are obtained. Capacity of PV system components such as PV array, storage battery and inverter size are then calculated. It is noted that several considerations need to be taken into account in a standalone PV system sizing, such as the kW h/yr needed to cover the load demand, the kW h/yr generated by the PV system, the Ah of battery banks, the area of the system that will occupy and the system cost [40]. Different sizing methods that have been reported and can be categorized as intuitive, numerical, analytical, commercial computer tools, artificial intelligence (AI), and hybrid methods. Available sizing methodologies for the PV array size and the storage battery capacity in a standalone PV system are given in Fig. 6.

4.1. Intuitive methods for optimum sizing a standalone PV system

The intuitive method uses a simplified calculation without establishing quantitative relationship between the subsystems in a standalone PV system or considering the fluctuation in solar radiation [41]. In this method, the size of PV array is obtained by the average energy that is produced from the PV array during the designing period which exceeds the load demand by a safety factor. This factor is selected based on the designers' experience. The intuitive method calculates the components' sizes using simple calculation but it has a disadvantage in which it may lead to over/under sizing of the stand E_L alone PV system that will cause low reliability for the system or/and increases system's capital, operational and maintenance costs [6]. As a result, this method is only suitable to be used for estimating initial and rough approximation of the standalone PV system. Simple mathematical equations are used to calculate the optimum sizes of the PV array, P_{PV} and the storage battery are given as follows:

$$P_{PV} = \frac{E_L}{\eta_S \eta_{Inv} PSH} S_f \tag{17}$$

where E_L is the daily load energy consumption, η_S and η_{Inv} are the efficiencies of the system's components, PSH is the peak sun shine hors, and S_f is the safety design factor chosen in most cases based on designer own experience which may be inaccurate.

The capacity of storage battery can be expressed as:

$$C_{Wh} = \frac{E_L D_{Autonomous}}{V_B DOD \eta_B} \tag{18}$$

where V_B is the voltage of the battery, η_B is the efficiency of the storage battery, and DOD is the battery depth of discharge rate. The procedure of the intuitive method can be illustrated as the depicted flowchart in Fig. 7.

Various intuitive methods have been developed for optimum sizing of standalone PV systems. Ahmad [42] developed an intuitive method for optimum sizing of the PV/battery combination in a standalone PV system for remote houses in Egypt. The author started the design by calculating the averages of the daily load demand and obtaining the averages of the daily solar radiation. By using the simple mathematical equations provided in Sharma et al. [43], the size of the PV array and the capacity of the storage battery are calculated. The battery charge controller and inverter are chosen based on longer lifetime and considering the maximum expected power. However, the reliability level which may lead to over/under sizing design was not taken into account in the standalone PV system sizing. In Bhuiyan and Asgar [44], optimum sizing of a standalone PV system based on intuitive method was conducted for residential applications in a location in Dhaka, Bangladesh. The method estimated the daily load demand, optimized the tilt angle and calculated the PV array size and the battery capacity based on the similar equations used in Sharma et al. [43].

Kaushika and Rai [45] developed an intuitive method for sizing the PV array and the batteries in a standalone PV system for some regions in India. The intuitive method was used to develop an expert system as a function of geographical coordinates. Monthly averages solar energy data are used with the site coordination to optimize the tilt angle. The expert system may not be efficient compared with the current software tools which use more accurate optimization techniques. Moreover, the technical and economic aspects are not taken into account in sizing the standalone PV system. Chel et al. [46] conducted optimum sizing of building integrated PV system for a location in India based on simple calculations using daily load demand and peak sunshine hours (PSH). The optimum PV/battery sizing combination was obtained based on minimum value of the cost of generated unit of energy, system life cycle and capital costs.

Moreover, Al-salaymeh et al. [47] used an intuitive method for sizing a standalone PV system for residential buildings in Jordan. The authors used averages of daily meteorological and load

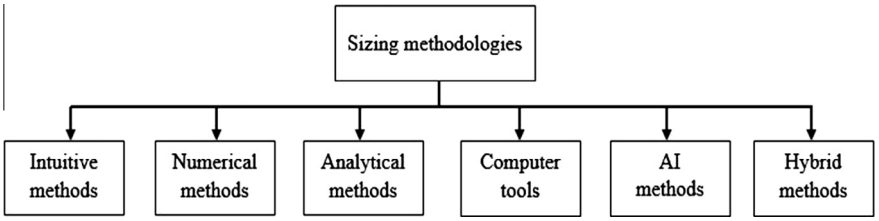

Fig. 6. Sizing methodologies for unit sizing in a standalone PV system.

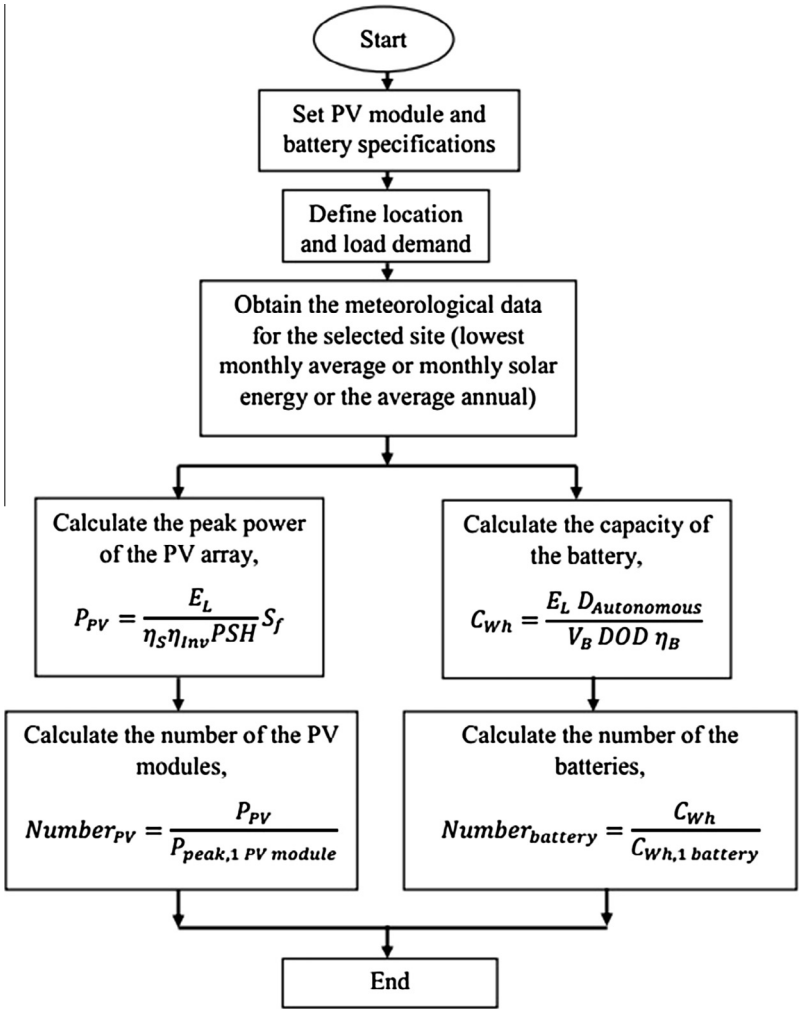

Fig. 7. General intuitive method flowchart.

Table 2
Summary of research works based on intuitive methods.

Ref.	Input parameters	Optimization function	Objective function	Outcomes
[42]	Daily averages meteorological data and load demand	–	TLCC	An optimization sizing of a standalone PV system for rural houses in Egypt is done based on intuitive method and using a developed computer program. However, TLCC analyses is obtained for the proposed system that needed to competitive the system with other types of conventional sources
[44]	Daily averages meteorological data and load demand	–	TLCC	An optimization for a standalone PV system in a location in Bangladesh is done. The intuitive method is used to optimize the balancing parameters. However, the optimum sizes of the PV array and the storage battery are chosen based on minimum TLCC
[45]	Monthly averages meteorological data and load demand	–	–	Developed an expert aid system for optimizing a standalone PV system for some regions in India is presented. Here, the developed system used an intuitive method for sizing the standalone PV system. The proposed system optimizes the size of the PV array with and without a storage battery as well based on monthly averages meteorological variables and geographical coordinates at each site
[46]	Daily averages meteorological data and load demand	–	TLCC, capital cost, and the cost of energy generated unit	An intuitive method is used for sizing a building integrated PV system in India. However, the author obtained the best PV/battery configuration capacity based on the minimum values of TLCC, capital cost, and unit cost of energy
[47]	Averages daily meteorological and load demand data	–	–	A sizing for a standalone PV system for residential buildings in Jordan is done. The authors used the simple calculation without taking into consideration the technical and economic aspects for sizing the PV array and the storage battery. However, the validation for the sizing method is not done which let this method questionable

demand data for this purpose. Using simple calculations, the authors started the sizing process by calculating the averages of the daily load energy requirements. Then the PSH was used to obtain the PV array size. However, 10% of load demand consumption for 5 days during cloudy weather was used to obtain the capacity of the battery. In this research work, the technical and economic aspects are not considered which may lead to oversizing results that will increase the cost of generated unit of energy. In

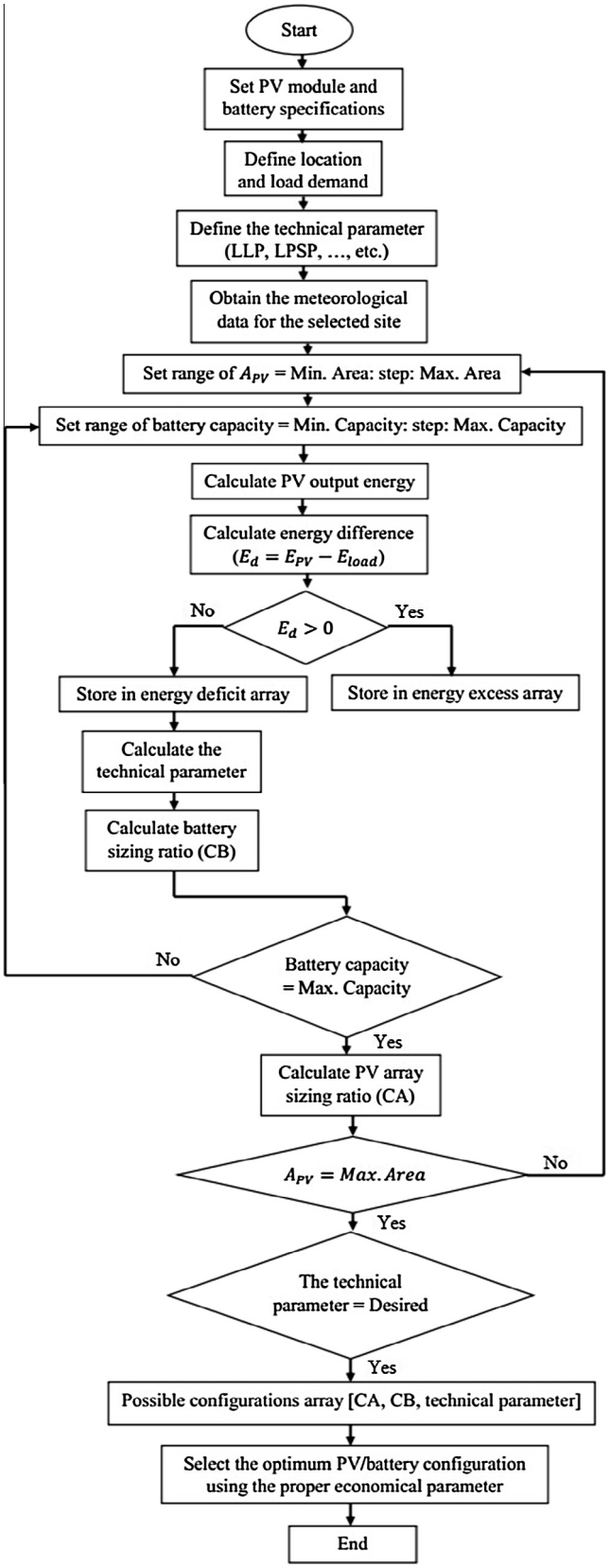

Fig. 8. General numerical method flowchart.

addition, using the daily averages data may lead to inaccurate results which may affect reliability of the system. The above mentioned research works are summarized in Table 2.

4.2. Numerical methods for optimum sizing a standalone PV system

In numerical methods, simulations are carried out at each time interval, usually an hourly or daily time period. In this method, System's energy balance is calculated and classified as deterministic or stochastic approaches. In the deterministic approach, the uncertainty associated with solar radiation is not considered due to the difficulties in finding data set for a specific system. On the other hand, probabilistic approach for sizing a standalone PV system considers the effect of solar radiation variability in the system design. Thus, the probabilistic approach is considered more accurate than the deterministic approach, and the energy reliability for the system can be conducted in a quantitative way [48]. The procedures of the numerical method can be illustrated as the depicted flowchart in Fig. 8.

Cabral et al. [49] presented a methodology for sizing a standalone PV system in a location in Brazil by applying stochastic analysis which include Markov chain and beta probability density function. The method models solar radiation on a tilted surface, obtains the average generated PV power and calculates the status of the battery. The system reliability by LPSP was calculated for each configuration and the optimum configuration is chosen based on minimum TLCC. In Kaldellis et al. [50], an optimum sizing methodology of a standalone PV system in a location in Greece is developed to reduce the electricity production cost. The daytime solar radiation and ambient temperature are used to calculate the PV rated power and the storage battery capacity based on energy balance between the generated PV power and the load power consumption. The optimum configuration based on the local demand was estimated and the cost of generated unit of energy by the PV system is calculated. This work has some limitations in which the use of daily average meteorological variables may affect accuracy of results and system reliability.

Celik et al. [51] optimally sized a residential standalone PV system for five sites in Turkey. A defined load and hourly meteorological variables for six years' period have been used to calculate the LLP values for each site. The optimum PV/battery configuration is selected for each site based on the minimum cost of generated unit of energy. The environmental impacts such as CO_2 released and global warming potential are assessed in the method. Chen [52] presented a fast optimization method for sizing a standalone PV system in a location in USA by taking into account daily average meteorological data and load demand. Without simulation, the method implements sizing by examining the climate time series of the site and defining the minimum charge/discharge time ratio in a battery. The minimum and maximum PV powers were identified to derive the number of batteries for the system. Then calculation of the number of the PV modules is done and the optimum configuration was chosen based on the minimum annualized total cost. Such a work has some limitations that may affect system reliability and accuracy of results because daily average meteorological variables are used and load demand was assumed constant. In addition, Spertino et al. [53] presented a standalone PV system sizing algorithm for optimizing the PV array and the storage battery in Italy. The simulation procedure is done based on a simple PV array and electrochemical battery models and using daily average meteorological data and load demand. The SOC of the battery was used as an optimization constraint to select the optimum configuration. The method has some disadvantages in which daily meteorological data are used and that there is no objective function which lead to high may cost of the generated unit of energy.

Kazem et al. [26] presented optimal sizing of a standalone PV system in Sohar, Oman by applying a numerical method using hourly meteorological and load demand data. The tilt angle is optimized for system's location so as to increase system efficiency and decrease the size of the PV array and the storage battery capacity.

The sizing methodology first defines efficiencies of system components and load demand and then obtains the daily solar radiation for the selected site. A range of the PV array area was used to find the optimum size of the PV array. Matrices of energy excess and energy deficit are obtained during the calculation of energy difference. At each PV/battery configuration, the LLP was obtained and stored in matrices. Then at the desired LLP, suitable sizes of the PV array and the storage capacity are found by plotting LLP vs. the PV array sizes, and the storage battery sizes vs. the PV array sizes. The optimum configuration is chosen based on the minimum system's capital cost. Chen [54] developed a numerical method for optimally sizing a standalone PV system under climate change in a location in USA by using daily average meteorological variables and load demand. The sizing methodology examined the climate time series of the site and defined the minimum charge/discharge time ratio in the battery cycle. The minimum and maximum PV powers were identified to derive the number of storage batteries and then the number of the PV modules was calculated. The optimum PV sizing was obtained based on the minimum annualized total cost. Semaoui et al. [55] presented an optimization model for optimal sizing of a standalone PV system by using a MATLAB–Simulink in a location in Algeria. The optimization methodology was implemented into three steps; modeling of standalone PV system components, developing load management model, and developing the optimization criteria which was done based on LPSP and energy cost. Hourly meteorological variables and load demand data are used to determine the optimum configuration. However, the LPSP values were obtained for each PV array/battery configuration with and without load management. While, a set of configurations were nominated based on a desired LPSP. Then the sizing curve was plotted for the configurations that satisfied the desired level of availability. Finally, the optimum configuration is chosen based on the minimum energetic cost. As a result, the authors found that the using of load management in sizing a standalone PV system reduces the energetic cost of the system.

The author of [56] optimized the capacity of a storage battery for a given PV array size in three locations in US. The analysis was carried out for two limiting cases of the PV/battery configuration. These limiting cases were sunlight limited operation and battery capacity limited operation. The limiting cases were taken into consideration to find the optimal battery capacity in order to make sure the operation of critical loads during any outage and nighttime. In the first limiting case, a daily solar radiation data is used to determine the capacity factor which is used to calculate the steady state operating power output. Then, the expected daily energy output from the PV array has been calculated taking into account the converting power losses and other factors. A software called "PVWATTS" was used to calculate these factors. Here, the suggested capacity of the battery was chosen in case to be large enough to store nearly the whole day's energy based on an acceptable confidence level. In the meanwhile, in the second limiting case, the suggested capacity of the battery was calculated based on the energy needed to cover the critical equipment during the full night-time and an acceptable confidence value of steady-state power output. Finally, the expected capacities of the battery that were obtained from the two cases was merged and examined to find the optimum battery size. This study has some limitations, firstly, the use of the daily solar radiation may affect the results. Secondly, the author used a simply PV model without a specific battery model which may lead to over/under battery size. Thirdly, the economical aspect was not included which may increase the cost of the system as well. Khatib and Elmenreich [57] presented a simplified energy flow models for three types of PV power systems using MATLAB. One of these systems is a standalone PV system. The logic of the standalone PV system energy flow was discussed with a MATLAB line code. The daily output power generated by the PV module/array was calculated using a regression model. Then, the energy produced from the PV array based on a defined time period was calculated. The inverter efficiency was chosen based on the typical efficiency curve and PV rated power. However, the net energy at the load side was calculated as the difference between the PV output energy and the load demand. Based on the amount of this term, the energy flow was drawn. In case the net energy is less than zero, the model goes to check the SOC of the battery. If the SOC is equal to the maximum level, the remaining energy will be an excess. Otherwise, the remaining energy will be stored into the storage battery. While, in case the net energy is bigger than zero, the model will check the SOC again. Here, if the SOC is equal to the minimum level, the remaining energy will count as a deficit energy. Otherwise, the remaining energy will be stored into the storage battery. Finally, the LLP is calculated as the ratio of the deficit energy to the energy of the load. The authors used a simple PV array model and a static battery model which may affect the sizing results. So far, this work helps the researchers to work helps the researchers in modeling, sizing and validating the standalone PV system.

Fathi et al. [58] described a 7.2 kWp PV plant installed in a remote area in Morocco. The aim of this work is to study the effect of the energy management strategy on the system performance. Daily basis meteorological data and load demand were utilized in this research work. As a result, the energy demand and SOC of the battery strongly affects the performance ratio. Dufo-lópez et al. [59] developed a lead-acid battery life time prediction model for optimizing a standalone PV system in Spain. The main aim of this research work is to estimate the battery life time in order to reduce the system's capital cost. The standalone PV system's components are modeled, whereas a regression model was used to express the PV array performance. However, a dynamic battery model was used in this development. Based on this prediction model, the key model is the battery charger converter's model which significantly affects the life time of the storage batteries. As a result, the developed model worked well to predict the lifetimes of the batteries better than the classical models such as Ah model, KiBam model, simplified version of Copetti model, and Schiffer model. This development will lead to improve the sizing methods in order to decrease the system's cost at the same level of availability. In this research work, the using of the regression model may affect the results.

Illanes et al. [60] presented a dynamic simulation and modeling of a standalone PV system using the state equation model and numerical integration methods. The initial state of the system and the time evaluation of the inputs were determined, then a numerical integrated method was implemented to model the proposed system. A double exponential PV model was used where, the voltage was considered as a state variable and derivative related to the applied current. The cell temperature was considered as a second state variable to be integrated into the PV system model. In this PV array model, the state variables were the cell temperature, the PV array voltage and current, the series inductance current, and the discharge of batteries. The dynamic simulation was compared with the static simulation for a standalone PV system. As a result, the dynamic simulation based on state variable model acted better than the static simulation of permitting the transient state. The disadvantage was in the running time which the dynamic simulation took longer time when run a long term simulation. This work can be used in sizing of a standalone PV system to improve the sizing results.

Lee et al. [61] presented a sizing strategy for isolated standalone micro-grids in Mali. A time series energy balance algorithm based on hourly meteorological and load demand data were utilized to create cost versus availability curve for the system. The methodology started by adjusting the system availability to minimize the

system's capital cost. The system availability used in this study was the energy shortfall probability (ESP). However, the analysis began by quantifying the system availability for each month. Then, the determination of the lowest availability was based on a sub-daily resolution. In this research, the models of the standalone PV system's components were not mentioned which let this methodology questionable.

In [62], a techno-economic sizing methodology by using a statistical approach was presented in a site in France. The methodology started by calculating the output power of the PV array in order to find the PV array output energy in the load side based on hourly time series meteorological and load demand data. According to the difference energy between the generated energy by PV array and the load demand, and the state of charge of the battery, the capacity of the battery was determined. The LPSP has been calculated for the generated search space. The best configuration was selected based on the minimum annualized cost of the system. The stochastic cloud cover sequences were simulated by Markov transition matrices. The authors used a dynamic battery model which increases the reliability of the sizing results. On the other hand, a regression model was used for modeling the PV array that may affect the sizing results as well. Erdinc et al. [63] presented a new perspective for sizing a PV and a storage battery based on demand response strategies. A techno-economical sizing methodology and mixed-integrated linear program (MILP) framework was used in sizing process. A smart home demand was utilized to validate the sizing methodology. The novelty of this work was in considering of the notably changing of the load pattern during the day-time.

Mandelli et al. [64] proposed a sizing methodology to optimally design an off-grid rural electrification systems in Uganda. Daily averages meteorological and load demand data were utilized. A value of lost load (VOLL) concept was used to determine the lost energy (LE) for all of the configurations. The LCE was used as an objective function to find the best PV array size and storage battery capacity. The PV array was modeled using a regression model and the battery was modeled based on a static model which may affect the accuracy of the sizing results. These effects may lead to increase the cost of generated unit of energy from the proposed model.

Nordin and Rahman [65] proposed an optimization sizing method of standalone PV systems based on Malaysian's metrological profile. Hourly load demand data and meteorological data were used. The sizing methodology supposed a search space for the PV array and batteries numbers. The LPSP was calculated for all combinations in the search space. Then, the combinations which have the desired LPSP were nominated. The best configuration was selected based on the LCE. In this work, the PV array has been presented using the linear model which may lead to an over/under sizing results. Meanwhile, a dynamic battery model was used to express the states of the battery. In addition, Ibrahim et al. [66] presented a sizing methodology to optimize the size of the PV array and the capacity of the battery in a standalone PV system in Malaysia. The sizing methodology was conducted based on hourly meteorological and load demand data. A random forests (RFs) model [67] was used for modeling the PV array model and dynamic battery model to reflect the dynamic behavior of the battery. The authors optimized the design space using the intuitive method equations to let the algorithm converges fast. These equations were used to determine the initial values of the PV array number and the capacity of the battery. Here, the LLP was calculated for all of the configurations in the optimized design space, while the TLCC was used to select the optimum configuration based on the minimum value. A summary of research works for sizing a standalone PV system based on numerical methods is listed in Table 3.

4.3. Analytical methods for optimum sizing a standalone PV system

In analytical methods, the components of a standalone PV system are characterized by computational mathematical models as a function of reliability so as to determine system's feasibility. The system performance can be estimated for different set of feasible size of system components. The best configuration of standalone PV system is evaluated by comparing single or multiple performance indexes of different configurations. The advantage of the analytical method is that sizing calculations are simple while the disadvantage is the difficulty in estimating coefficients of the mathematical equations which are location dependent [48]. The procedures of the analytical method can be illustrated as the depicted flowchart in Fig. 9.

Some of the authors have utilized this method for sizing SAPV. In Markvart et al. [68], a sizing procedure of a standalone PV system in a location in UK was presented based on observed time series of solar radiation. The authors determined the sizing curve using a simple geometrical construction as a superposition of the individual climatic cycles. However, these climatic cycles were divided into two climatic cycles which the first one includes the days with average solar radiation which is equal to or more than the obtained overall averages solar radiation. In the meanwhile, the second one included the days with average solar radiation which is less than the obtained overall averages solar radiation. Then the resulted sizing curve of the PV/battery configuration is fitted by an exponential function to drive mathematical equations that used to calculate the PV array size directly. In this work, the load was supposed to be demanded at the night time which is a rare situation. On the other hand, the authors used the daily averages of solar radiation and load demand data which means that the source uncertainty and load variation were not taken into consideration. Moreover, the economic aspect was not considered which may have an effect on tradeoff results with similar systems.

In [69], algebraic equations for optimal PV array area, optimal useful capacity of storage battery, and constant of integration have been formulated in an analytical method for optimally sizing a standalone PV system in Malaysia. However, monthly mean daily meteorological data based on worst month were used for sizing. The sizing curve was obtained by differentiating the cost function which aims to minimize the system capital cost at a desired level of availability. Using the resulted equation, a sizing curve was plotted at the desired LLP. The optimum sizing ratios for the PV array area and the useful capacity of storage battery were determined by the intersection of the cost line with the desired LLP curve. In this research work, the sizing model was more constructive because of incorporation with different useful variables such that competence the model to be applied in different locations. On the other hand, the authors used monthly mean daily meteorological data which may affect the sizing results. Khatib et al. [70] developed an analytical method for optimal sizing of the PV array and the storage battery for five sites in Malaysia by deriving an optimization formula for a standalone PV system that can be applied for all locations in Malaysia. The sizing procedure first defined some constants such as system components specifications and load demand. The PV array and the battery sizes were then calculated using daily average meteorological variables and daily load demand based on LLP. Plots of LLP versus the PV array capacity, C_A and C_A versus battery capacity, C_S were used to find their mathematical correlations. MATLAB fitting toolbox was used to derive the curve-fitting equations from the correlations. From the derived equations, coefficients were obtained for the five sites in Malaysia, and the averages of these coefficients were taken to establish a general sizing model for Malaysia. However, the method has some limitations in which daily average solar radiation data were used

Table 3
Summary of research works based on numerical methods for sizing a standalone PV system.

Ref.	Input parameters	Optimization function	Objective function	Outcomes
[49]	Hourly meteorological data and load demand	LPSP	TLCC	A sizing methodology of a standalone PV system in Brazil is developed using stochastic analysis. However, the developed methodology used LPSP term to find out the optimum PV/battery configuration. The optimum PV/battery configuration is chosen based on the minimum TLCC. Moreover, the stochastic model presented more reliable and realistic results. However, it sis more complex than deterministic model
[50]	–	–	Electricity production cost	An optimum sizing methodology of a standalone PV system in a location in Greece is developed to reduce the electricity production cost based on energy balance between produce power by PV system and consumption power by load
[51]	Hourly meteorological data and load demand	LLP	Cost of energy	The TLCC varies significantly with LLP values. However, the unit cost of energy tends for increasing highly to achieve the lowest LLP levels. However, with the conservative European average electricity mix, the payback period for this system is 6.2 years and the CO_2 payback time is 4.6 years
[52]	Daily averages meteorological and load demand data	LPSP	Annualized total cost	An optimization of a standalone PV system based on threshold-based (EVT) in a location in USA is conducted. A technological and economical comparison is done with others methods such as traditional daily energy method and sizing curve method which seems that this method is fast than the previous mentioned methods. However, the proposed method can easily get the same results as the sizing curve method
[53]	Daily averages meteorological and load demand data	SOC	–	An optimization for a standalone PV system in Italy is done. The simulation process carried out based on simple PV array and electrochemical battery models. The best configuration chosen based on SOC
[26]	Hourly meteorological data and load demand	LLP	System's capital cost	An optimal sizing of a standalone PV system is conducted in Oman. The authors used numerical method and hourly meteorological data. However, LLP is used as a reliability parameter and the best configuration is chosen based on minimum system's capital cost. Finally, the authors mentioned the PV array sizing ratio, storage battery sizing ratio for the selected location, and the cost of energy
[54]	Daily averages meteorological data and load demand	LPSP in term of threshold-based (EVT)	Annualized total cost	An optimization of a standalone PV system based on EVT is conducted. A comprehensive economic optimization contains capital, maintenance, and penalty costs of the alternative configurations is also presented
[55]	Daily averages meteorological data and load demand	LPSP	Energetic cost	An optimization model of a standalone PV system in Algeria is conducted. The main objective of this work is to include the load management in the technical and economical parameters in the optimization and their effects on the system life cycle
[56]	Daily solar radiation data	–	–	An optimal sizing for a storage battery in PV power island systems in three sites in US is conducted. The study aimed to find a nominal optimum point for the PV/battery configuration subject to the availability sunlight. The analysis was done based on two limiting cases. The optimal battery size is chosen after merged and examined the expected capacities of the battery that obtained from the limiting cases
[57]	Any available time period of meteorological and load demand data	LLP	Based on the designer view	A simplified energy flow model for a standalone PV system is presented with other energy flow models. This model helps the researchers to work helps the researchers in modeling, sizing and validating the standalone PV system
[58]	Daily basis meteorological and load demand data	–	–	The effects of the energy management strategy on the performance system is studied for a 7.2 kWp PV plant installed in a location in Morocco. The study concludes that the energy demand and SOC of the battery strongly affects the performance ratio
[59]	Hourly meteorological and load demand data	–	–	A development for a lead-acid battery life time prediction model is presented. The developed model in a standalone PV system is tasted in two sites in Spain. As a result, the developed model is better than the classical models in predicting the lifetimes of the batteries. In conclusion, this work may improve the sizing of a standalone PV system results which may lead to decrease the cost of generated energy
[60]	Secondly meteorological and load demand data	–	–	Dynamic simulation and modeling of a standalone PV system based on the state equation model and numerical integration methods are presented. The standalone PV system is modeled using four state variables as initial variables. Then, the solved using the numerical integration methods. The dynamic simulation model expresses the priority for modeling the standalone PV system than the static simulation model
[61]	Hourly meteorological and load demand data	ESP	System's capital cost	A standalone PV system sizing strategy is presented. Hourly time series data is used in the simulation. The sizing curve for different combinations is generated as a function of the capital cost versus the availability trade-offs
[62]	Hourly meteorological and load demand data	LPSP	Annualized cost of the system	A safe sizing methodology of a standalone PV system is conducted in a location in France. The authors used LPSP which is highly sensitive to the stochastic nature of cloud cover. Meanwhile, the authors obtained LPSP on a large cloud cover scenarios and cost model for each scenario. The best scenario is selected based on desired LPSP level and at minimum annualized cost of the system
[63]	Hourly meteorological and load demand data	–	LCE	A MILP model for techno-economic sizing of a smart house appliances is carried out. The novelty of this work was in considering of the notably load pattern changing
[64]	Daily averages meteorological and load demand data	Lost energy (LE)	LCE	A sizing methodology for an off-grid PV system is done. The sizing methodology was done based on VOLL and LCE
[65]	Hourly meteorological and load demand data	LPSP	LCE	An optimization method for sizing standalone PV systems in Malaysia is presented. The sizing done based on hourly data. The LPSP is used as a design constrain. However, the best solution is chosen based on the minimum LCE
[66]	Hourly meteorological and load demand data	LLP	TLCC	A sizing methodology for optimizing the size of a standalone PV system based on Malaysian's weather condition is presented. The LLP values are calculated for all the PV/battery configuration in the design space. Then, the best configuration is chosen based on the minimum TLCC

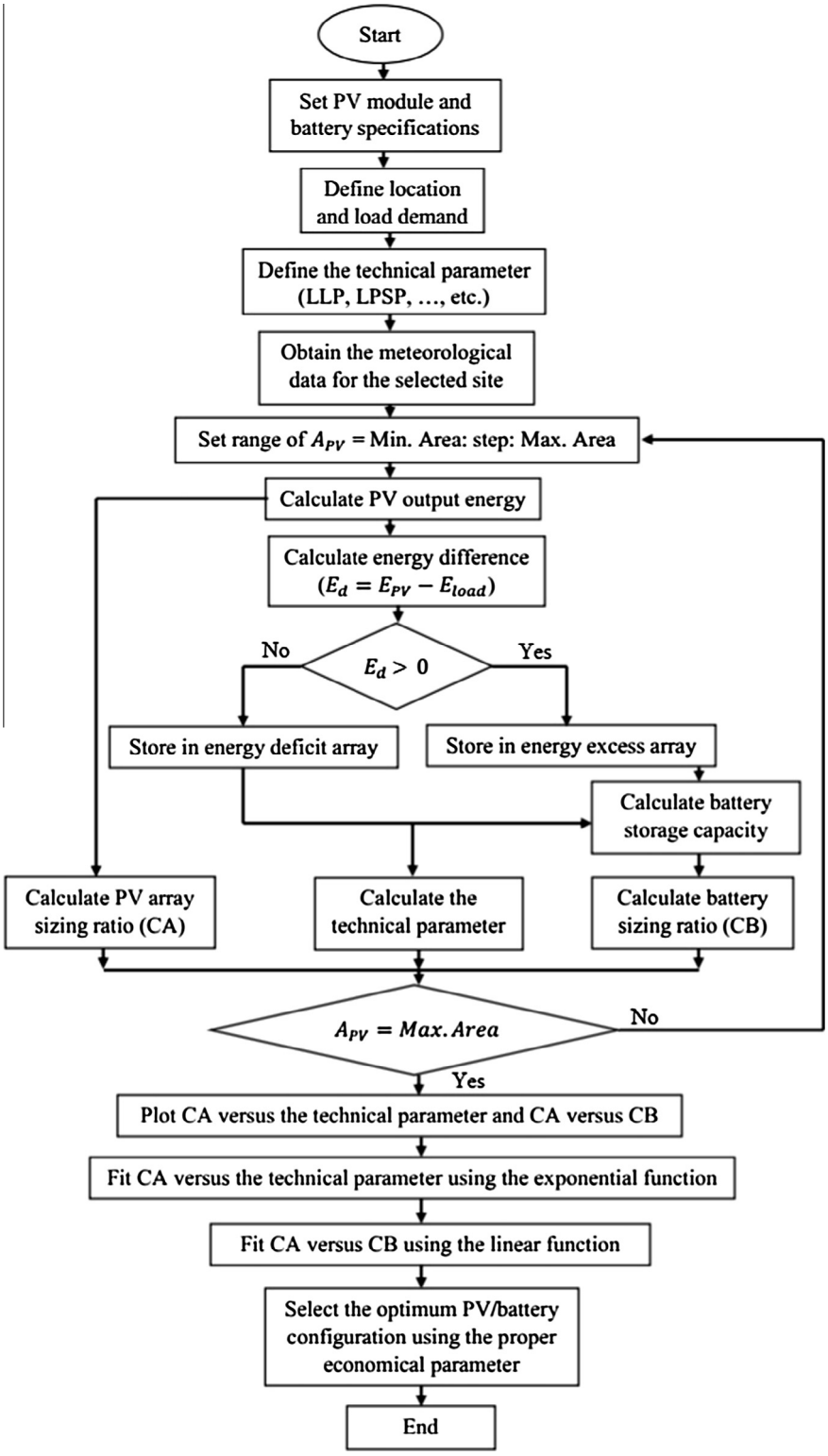

Fig. 9. General analytical method flowchart.

and economical parameters were not considered in sizing the standalone PV system.

In the meanwhile, Bortolini et al. [71] presented a technical and economic model for optimizing a PV/battery combination with a grid-connected design, as a backup source in a location in Italy. The aim of this research work was to design the proposed system based on analytical system's components models. Using hourly meteorological and load demand data, SOC as an optimization function and levelized cost of energy as an objective function the sizing was implemented based on an analytical method.

Moreover, AL Riza et al. [72] optimized the size of a standalone PV system in Ipoh, Malaysia. The authors used simple PV and battery models for calculating the daily output energy from the system. For a desired LPSP, the sizing curve was plotted. In this

Table 4
Summary of analytical methods used for sizing a standalone PV system.

Ref.	Input parameters	Optimization function	Objective function	Outcomes
[68]	Daily averages meteorological data and load demand	–	–	Simple geometrical construction way is used of sizing curve for a SAPVS. This work is done based on the time series of long observed solar radiation data over a specific time
[69]	Monthly mean daily meteorological data and load demand	LLP	System capital cost	An analytical method is used for sizing a standalone PV system in Malaysia. The optimum sizing ratios for PV array area and useful capacity of storage battery are determined by the intersection of the system cost line with the desired level of availability curve. Moreover, the explicit form of such a function has been determined. Then it turns out to be independent of the locality. Finally, using this function, the cost analysis of PV systems can be performed in a simple way
[70]	Daily averages meteorological data and load demand	LLP	–	A new sizing method is presented for specific locations in Malaysia. This method is done based on LLP. However, optimization equations for PV array and storage battery sizes are obtained using MATLAB fitting toolbox to cover whole sites in Malaysia
[71]	Hourly meteorological and load demand data	SOC	LCE	A technical and economic model for designing a PV/battery combination in Italy is presented. The sizing methodology aims to design and management the proposed system based on analytical method. An hourly meteorological and load demand data is used in this research work
[72]	Hourly meteorological data and load demand	LPSP	System capital cost and LCC	A design space approach is used for sizing a standalone PV system in Malaysia. The optimum sizes for PV array area and capacity of storage battery are determined by the intersection of the system cost and LCC lines with the desired level of availability curve. In this approach, the user can choose the realistic available PV panel size and storage battery capacity

Table 5
Summary of availability software tools for sizing a standalone PV system.

Software tool/ Developer	Input	Output	Summary	Availability
HOMER /National Renewable Energy Laboratory, USA	Load demand, monthly average meteorological data, system components specifications and costs, and emission data	Optimal unit sizing, renewable energy fraction, capital cost, net present cost, cost of energy, excess energy, and uncovered load	Capable for modeling and sizing a standalone PV system and other renewable integrated systems configurations based on systems' life cycle cost [73]	Free www.homerenergy.com
IHOGA/University of Zaragoza, Spain.	Load demand, meteorological data, component specifications, and financial data	Multi objective optimization, cost of energy, life cycle emission, buy-sell analysis of energy	Hourly simulation for sizing renewable energy configurations. It solves single or multi objective optimization problem based on genetic algorithm [73]	EDU version – Free PRO version – Priced www.unizar.es/rdufo/hoga-eng.htm
TRNSYS/University of Wisconsin, USA.	Load demand, meteorological data, and inbuilt models from own library	Dynamic simulation results for both electrical and thermal energy systems	Simulation for unit sizing is very precise which varies between 0.01 sec and 1 h. The software is used to model solar energy applications and conventional buildings [73]	Priced www.trnsys.com
RETScreen/Ministry of Natural Resources, Canada	Load and climate data, size of the PV array, and product database	Optimal unit sizing, financial and risk analysis, energy efficiency, environmental and cogeneration analyses	A Microsoft Excel spreadsheet based on energy project analysis for unit sizing of different renewable energy configurations [73]	Free www.retscreen.net
PVSYST / PVsyst SA, France	Load demand, monthly average meteorological data, system components specifications, tilt angle for a PV module/array	PV array capacity, battery capacity, inverter size	It has the capability of sizing standalone and grid-connected PV systems [75]	Priced www.pvsyst.com/en/download
PV.MY/Power System Research Group, Universiti Kabangsaan Malaysia, Malaysia	Daily load demand, PV module and battery specifications, daily meteorological data only for Malaysian states	PV array capacity, battery capacity, inverter size, charge controller size, system's cost, dump load, and the monthly optimum tilt angle	A MATLAB based tool for determining the optimal sizing for different PV systems configurations in Malaysia. It used artificial neural network for prediction of meteorological variables, optimization of the PV module tilt angle [75]	–

study, the objective function was formulated based on system capital cost and LCC. Using the design space approach, the optimum configuration was chosen based on the realistic available PV panel size and storage battery capacity which was better than using the deterministic approach in this purpose. This research work used simple models for the systems' components which makes the accuracy of system's output questionable because these models may not express the variation of the meteorological data. A summary of research works based on analytical methods available in literature is illustrated in Table 4.

4.4. Commercial software tools for optimum sizing a standalone PV system

Currently, many software tools such as Hybrid Optimization Model for Electric Renewables (HOMER), Improved Hybrid Optimization by Genetic Algorithms (IHOGA), Transient Systems Simulation Program (TRNSYS), RETScreen [73,74], and PV.MY [75] are available software tools for optimal sizing of a standalone PV system which are described in Table 5.

HOMER is a widely used software for sizing a standalone PV system and other renewable energy integrated systems configurations in a standalone and grid-connected modes [73]. The simulation of the PV/battery configuration model is conducted using hourly load demand and meteorological data based on the system's life cycle cost. The input data can be supplied to HOMER based into two options. In the first option, monthly average data must be provided by a user. Then an embedded function transfers the data to hourly data synthetically based on a statistical technique. The second option is that a user can select hourly data online based on the location coordinates. HOMER is a useful software which allows users to compare many design configurations based on their avail-

ability and economic merits [74]. Many research works which dealing with modeling and optimum sizing of integrated systems configurations using HOMER software are available in the literature [76–79]. In Al-Karaghouli and Kazmerski [80], HOMER based study is implemented to calculate the size of a standalone PV system and its total life cycle cost in southern Iraq. The load demand was assumed to be 31.6 kW and the optimization results were 6 kWp PV modules, 80 batteries (225 Ah/6 V), and a 3-kW inverter. In [81], HOMER tool was used to optimize a standalone integrated renewable energy system for a remote location in India. A combined techno-economic and demand side energy management was used in the optimization. Hourly meteorological and load demand data were utilized. LLP and excess electricity terms were used as a design constrains, while NPV is used as an objective function. The sizing methodology was done with and without the energy management strategy and the results were compared. As a conclusion, the sizing results got from with demand side energy management are better than the sizing results obtained without implementing the demand side energy management.

IHOGA is an hourly simulation software for sizing renewable energy configurations. It provides a single or multi objective optimization problem based on genetic algorithm. The sizing parameters are remained constant into the simulation process for each hour. In addition, many control strategies can be used [73]. In [82], a HOGA software sizing tool, which is an optimization and a simulation software based on a GA, is used to optimize the sizing of renewable sources is proposed in six farming facility in Spain. PV array and storage battery are considered as a part of the system to supply the pumping systems. The best solution is selected based on the minimum net present value. TRNSYS has a very precise simulation process for unit sizing which is varies between 0.01 sec and 1 h. This software is used to model solar energy applications and conventional buildings. However, it's a flexible tool for simulating the transient integrated systems behavior [74]. RETScreen is a clean energy project analysis software which is designed as a Microsoft excel application tool. RETScreen can used to assess the feasibility and viability of renewable systems configuration, energy efficiency of the systems, financial and risk analysis, environmental analysis and cogeneration projects. However, RETScreen has been used to evaluate the financial viability of a standalone PV system in Egypt [83], the feasibility of standalone PV system using cost of energy in Oman [84], and the potential of a building-integrated PV system in residential sector [85]. Base on the literature, all the pervious tools are supported the technical and economic analysis.

PVSYST is a sizing software tool which has the capability of sizing standalone and grid-connected PV systems. Monthly meteorological data are used for the located site, and hourly data are created synthetically in the program. A loss of load probability is used for determining the optimal PV array and battery sizes. The PV module/array tilt, the autonomy time of the system, the storage battery type, the PV module type and the type of inverter also can be selected. However, different simulation variants, and horizon shadings can be used [86]. Finally, PV.MY is a MATLAB based software tool for optimal sizing of PV systems. The software has the capabilities of predicting the meteorological data such as solar radiation, ambient temperature using artificial neural network (ANN), optimizes the PV array tilt angle, optimizes the inverter capacity and calculate optimal sizes of PV array and storage battery. The iterative methods are used for PV system sizing of standalone PV system and other PV systems configurations. The LLP term is used as an optimization function. Liu and Jordan model on a tilt surface is used in optimizing the monthly tilt angle. In addition, a model for inverter efficiency curve is used for optimizing the inverter size [75]. From the literature, the widely used software tools for sizing standalone PV systems are HOMER and RETScreen. Table 6 presents the advantages and disadvantages of the available commercial software tools for sizing standalone PV system.

4.5. Artificial intelligence methods for optimum sizing a standalone PV system

Artificial intelligence (AI) methods are used to overcome the unavailability of meteorological data for sizing a standalone PV system in remote areas. It can handle nonlinear fluctuation of solar energy source and can be categorized as prediction algorithm such as artificial neural network (ANN) and genetic algorithm (GA) for predicting the sizing ratios of a standalone PV system, and searching algorithm such as fuzzy logic (FL) and tabu search (TS).

Khatib and Elmenreich [87] used a general artificial neural network (GANN) for sizing a standalone PV system in Malaysia. In this study, the authors used an analytical method to find the sizing rations for the PV array and the storage battery for five sites in Malaysia. Hourly meteorological and load demand data are used for this purpose. Moreover, the sizing was done based on a desired LLP and system capital cost as mentioned in [70]. By using these sizing rations as outputs, and latitude, longitude and a desired LLP as inputs, the GRNN was trained by 70%, tested by 15%, and validated by 15% of the dataset to predict the sizing ratios for Malaysia. As a result, the predicted sizing rations accuracy was relatively high with mean absolute percentage error (MAPE) is 0.6%. However, this model may be generalized for predicting the sizing rations for a standalone PV system in whole of Malaysia.

Yoza et al. [88] applied tabu search (TS) algorithm to optimize the PV/battery combination in a smart house in Japan. The optimization problem was implemented in two parts by considering optimal scheduling of appliances which is optimized based on minimum

Table 6
Advantages and disadvantages of the available commercial software tools for sizing a standalone PV system.

Software tool	Advantages	Disadvantages
HOMER	Easy for use and suitable for optimization, feasibility, and sensitivity analysis	User cannot change the component specifications, and it does not consider bus voltage variation
IHOGA	Capable of solving single and multi-objective optimization problems and provide optional sensitivity analysis	Probability analysis is not considered, net metering is not included, some limitations in the analysis for EDU version and internet connection is required for PRO version
TRNSYS	Capable of simulating transient integrated systems behavior	–
RETScreen	Excel spreadsheet application and provides strong meteorological data	Provides few options for retrieval, and no time series option for data input
PVSYST	User friendly software tool suitable for optimization, and capable of simulating the PV system performance	Cost analysis is not considered, and uses statistical method to convert the monthly meteorological data to hourly data
PV.MY	It has the ability to simulate the designed PV system and display its performance for a period of year, exporting the optimum tilt angles, and it can import solar data from xls and txt files	It capable just for Malaysia, the searching time for the optimal solution is around 70 sec, and it used daily data

Table 7
Summary of AI methods used for sizing a standalone PV system.

Ref.	Input parameters	AI technique	Optimization function	Objective function	Outcomes
[87]	Hourly meteorological data and load demand	ANN	LLP	System capital cost	An ANN model is used to sizing a standalone PV system in Malaysia. Firstly, an analytical method is used based on a desired LLP and system capital cost for calculating the sizing ratios in five sites in Malaysia. Then an GANN model is trained using geographical coordinates and LLP to predict the sizing ratios in whole of Malaysia with high prediction accuracy
[88]	Hourly Load demand and meteorological data	TS	–	System's capital and operational cost	A TS algorithm is used to optimize the sizing of standalone PV system in Japan. The optimization done into two into two parts, the optimal scheduling part and expansion planning part during a 20-year period
[89]	Load demand and the monthly average of daily solar radiation	FL	SOC	–	A sizing method for sizing the PV/battery system in a standalone PV system is used. The sizing method consists a FL algorithm which is developed using MATLAB/Simulink. The energy demand of the load and the monthly average of daily solar radiation are used as inputs and PV panel surface area and battery capacity are the output
[90]	Daily meteorological and load demand data	GA	Minimize the pollutant emission and maximal the energy generation	LCC	A sizing methodology based on GA based method is used to optimize a standalone micro-grids system. The optimum solution is chosen based on LCC, renewable energy sources generation and airborne pollutant emissions
[91]	Synthetic hourly load demand and meteorological data	GA	Unmet load	System's capital cost	A GA is used to optimize the sizes of the PV array and the storage battery in a SAPVS. However, a comparison study is done with other two classical methods, worst month method and LPSP method. The results show that GA method acts better than these both methods

Table 8
Summary of hybrid approaches.

Ref.	Input parameters	Hybrid technique	Optimization function	Objective function	Outcomes
[92,93]	Daily averages meteorological and load demand data	ANN based on GA	LLP	System's capital cost	A methodology of generating the sizing curves of the standalone PV system is proposed using feedforward ANN based on GA. In general, this method depends on the geographical coordinates and LLP values to predict the PV array size that calculated previously using numerical method. This predicted sizes are used to find the battery sizes. Meanwhile, the best configuration is chosen based on minimum system's capital cost
[94]	Hourly load and meteorological data	Analytical method based on iterative method (long-term performance)	LLP	System's capital cost	An optimal design and sizing of a standalone PV system is done using combined analytical method and iteration method with long-term performance of the system. The influence of the maximum DOD of battery, load profile, and voltages limits of the battery are also taken into consideration to improve the sizing results
[95]	Daily meteorological and load demand data	Numerical method based on GA	–	ACS	A multi-objective optimization method for sizing an off-grid batteryless PV system is proposed. The sizing algorithm implemented using numerical method based on GA. The best PV size is selected based on the minimum ACS

operational cost and expansion planning part which is optimized based on minimum total system cost. In this work, the economic aspect which was incorporated in the optimization function for the two parts may not satisfy the technical aspect accurately.

Salah et al. [89] applied fuzzy logic to optimize the PV panel surface area and the battery capacity in a standalone PV system in the region of Sfax, Tunisia. Fuzzy logic is developed using MATLAB–Simulink in which the energy demand of the load and the monthly average of daily solar radiation are used as inputs and the PV panel surface area and the battery capacity were the outputs. The SOC term is used as the objective function of the optimization problem.

Zhao et al. [90] used a GA based method to optimize unit sizing method for a standalone micro-grids system in an island in China. An innovation operation strategy based on the coordination of energy storage is used to developed the sizing results. The proposed strategy developed in order to minimize the LCC and pollutant emission, while maximal the energy generation. The sizing is done using daily data and simple PV array and battery models. The used of simple models may lead to an over/under sizing results which may affect the cost of the energy unit generated as well. In [91], a GA was used for sizing the PV array size and the storage battery in a standalone PV system as a PV lighting system application in Adrar, Algeria. The GA method has been compared with two classical methods, namely, worst month method and LPSP method. PVSYST software is used to generate synthetic hourly meteorological data of the located site due to the measured data are not available. The algorithm works with a Boolean vector containing the PV pick power correction coefficient (k_1) and storage battery nominal capacity correction coefficient (k_2). By obtaining k_1, it used to estimate the maximum power produced by the PV array. In addition, calculating k_2 allows to determine the capacity of the battery. For each vector, the maximum power is applied to the storage battery to calculate the unmet load parameter. Here, the less value of unmet load parameter expresses the possible configurations. Finally, the best configuration is selected based on the minimum system's capital cost. A summary of AI methods for sizing a standalone PV system is summarized in Table 7.

4.6. Hybrid methods for optimum sizing a standalone PV system

Due to the disadvantages of the previous methods, hybrid method which is an effective combination of two or more different methods is applied to obtain the optimal result for a specific sys-

Table 9
Limitations of the optimal sizing methods.

Sizing method	Input data	Limitation
Intuitive methods	Daily and monthly average meteorological data	Simple calculations used based on daily or monthly meteorological data may lead to over/under sizing of system design, low reliability and increase system capital, and maintenance and operation costs
Numerical methods	Hourly, daily and monthly average meteorological data	Suboptimal solutions are reached as computation involves linear changes of the decision variables
Analytical methods	Hourly, daily and monthly average meteorological data	Less flexible in designing a standalone PV system as performance is estimated by the computational models
Software tools	Hourly, daily and monthly average meteorological data	Unable to improve system components and change the component specifications
AI methods	Hourly, daily and monthly average meteorological data	Complexity in designing system components
Hybrid methods	Hourly, daily and monthly average meteorological data	Complexity in designing system components which are based on complex algorithm functions

tem. While most optimization problems are multi-objective in nature, the hybrid method is considered appropriate to deal with such problems [27].

Mellit [92] and Mellit et al. [93] developed ANN based GA which is used to predict the optimum size of the PV array and the battery in a standalone PV system for Algerian location. The optimization factors are calculated based on a numerical method and the optimum sizing factors are obtained based on LLP at minimum system's capital cost. The developed ANN model has four inputs, namely, latitude, longitude, altitude and LLP and it is used to predict thirty possible outputs of array capacity. Here, GA is used to optimize the number of ANN neurons to improve the system performance. Thirty possible battery capacity sizes are calculated mathematically as a function of the predicted PV array sizes. After finding the thirty possible configurations, the optimum configuration is obtained based on minimum system's capital cost.

In Nikhil and Subhakar [94], a hybrid method is developed for sizing a standalone PV system in Vellore, India. The sizing algorithm combines the analytical and iterative methods using MATLAB simulation and based on LLP. This work studies the interaction of hourly variation of load demand and meteorological data for keeping the system 100% reliable. An adaptive feedback iteration method is used to obtain the optimum PV/battery configuration based on the minimum system capital cost. In addition, parametric analysis is conducted to study the effect of load duration and charge controller low-voltage disconnect on the sizing results. The results are validated using experimental data and compared with other sizing methods. In [95], an optimization method is carried out for sizing an off-grid battery less PV system in Iran. Daily meteorological and load demand data are used. The sizing methodology is done using a numerical method based on GA. The objective function that used in the optimization is ACS. The PV array has been modeled using regression model which may lead to over/under sizing results. A summary of the hybrid used methods is summarized in Table 8.

4.7. Comparison of optimal sizing methods of a standalone PV system

Each of the above mentioned methods for optimal sizing of a standalone PV system has limitations that can be summarized as shown in Table 9. The method presented in this thesis attempts to overcome the limitations of the previous methods in optimal sizing of a standalone PV system. The accuracy of some of the previous methods is questionable, especially when dealing with highly uncertain solar radiation. Thus, an improved numerical based optimization method is proposed for optimal sizing of the PV array and the storage battery in a standalone PV system. The advantage of the developed numerical based optimization method is that it is accurate and simple in which it uses iterative loops and linear functions compared to other methods which are based on complex algorithm's functions. Meanwhile, hourly time series meteorological data such as solar radiation and ambient temperature are used for optimal sizing of a standalone PV system.

5. Findings

From the previous research works, it is noted that there are many challenges in designing an optimal standalone PV system. Some of the challenges can be summarized as follows:

i. Availability of meteorological variables at the target site. The lack of meteorological data such as solar radiation and ambient temperature in small time step such as hourly records for the target site is one of the challenges in the optimization process because it affects system reliability and accuracy of results.
ii. Accurate load forecasting of hourly or daily average load profile is needed for designing optimum sizing of a standalone PV system.
iii. Numerical and analytical methods need longer computation time in obtaining optimal sizing result as compared to other methods. Therefore, new methods that can give accurate results with less computing time are required.
iv. Accurate modeling of subsystems taking into account all the internal and external factors that may affect model operation is required for an accurate PV sizing.
v. In general, results of most optimization techniques are location dependent. Therefore, it is important to develop an optimization technique that can be applied for all sites.
vi. The losses in power converters of a standalone PV system have to be reduced to an acceptable level.
vii. A suitable energy management technique is required to manage and control power flow based on load demand variation so as to improve the operation of a standalone PV system.
viii. A feasible standalone PV system needs an accurate monitoring system that can record the important information about the system's operation for better protection and control.
ix. The life cycle of storage batteries needs to be improved by innovation technologies so as to improve system sustainability and at the same time reduce system cost.
x. One of the major concerns for the users and manufacturers at the same level, is the disposal of the storage batteries. However, the recycling and reused for these batteries will increase the positive ecological impacts for the system.

6. Conclusion

The paper explains the meteorological data generation methods, and various configurations and sizing methodologies of a standalone PV energy system. To solve the problematic of sizing a

practical standalone PV system, various parameters such as technological, economical, and socio-political factors are summarized and formulated. Meanwhile, the selection of some of these factors is essentially to obtain an optimal design for the standalone PV system in which the optimal design is highly depended on these factors. Most of the papers for sizing a standalone PV system are carried out based on numerical methods. Moreover, software tools developed by various manufacturers are also used widely in the practical field as they are simple for using. However, some of AI methods such as ANN and GA are used for improving the applicability of the size optimizations method. AI methods has the ability to search complete searching space with less time consumption compared with other methods, and can be tuned to converge at the optimal solution, but they sometimes become inefficient due to some difficulties such as the large number of inputs. To avoid the limitation of the existing sizing methods some other methods used such as hybrid sizing method which is a combination of two or more of the sizing methods that utilizes the positive impact variables of these methods in order to obtain the optimal solution.

Acknowledgment

Part of the authors has received a financial support by University Kebangsaan Malaysia under the research grants ETP-2013-044 and DIP-2014-028.

References

[1] IPCC. Climate change 2007: the physical science basis. Summary for policymakers. Cambridge, UK and New York, USA: 2007.
[2] Freris L. Renewable energy in power system. Wiley; 2008.
[3] IPCC. Renewable energy sources and climate change mitigation: special report of the intergovernmental panel on climate change. Cambridge, UK and New York, USA: 2012. http://dx.doi.org/10.5860/CHOICE.49-6309.
[4] Khatib T, Mohamed A, Mahmoud M, Sopian K. Modeling of daily solar energy on a horizontal surface for five main sites in Malaysia. Int J Green Energy 2011;8:795–819. http://dx.doi.org/10.1080/15435075.2011.602156.
[5] Chauhan A, Saini RP. Renewable energy based power generation for standalone applications: a review. In: Energy Effic Technol Sustain (ICEETS), 2013 Int Conf; 2013. p. 424–8. http://dx.doi.org/10.1109/ICEETS.2013.6533420.
[6] Khatib T, Mohamed A, Sopian K. A review of photovoltaic systems size optimization techniques. Renew Sustain Energy Rev 2013;22:454–65. http://dx.doi.org/10.1016/j.rser.2013.02.023.
[7] Hosseini SH, Ghaderi SF, Shakouri GH. An investigation on the main influencing dynamics in renewable energy development: a systems approach; 2012. p. 92–7. http://dx.doi.org/10.1109/ICREDG.2012.6190476.
[8] Elhadidy MA, Shaahid SM. Parametric study of hybrid (wind + solar + diesel) power generating systems. Renew Energy 2000;21:129–39. http://dx.doi.org/10.1016/S0960-1481(00)00040-9.
[9] Bhave A. Hybrid solar–wind domestic power generating system—a case study. Renew Energy 1999;17:355–8. http://dx.doi.org/10.1016/S0960-1481(98)00123-2.
[10] Beyer HG, Langer C. A method for the identification of configurations of PV/wind hybrid systems for the reliable supply of small loads. Sol Energy 1996;57:381–91. http://dx.doi.org/10.1016/S0038-092X(96)00118-1.
[11] Gansler RA, Klein SA, Beckman WA. Assessment of the accuracy of generated meteorological data for use in solar energy simulation studies. Sol Energy 1994;53:279–87. http://dx.doi.org/10.1016/0038-092(94)90634-3.
[12] Wahab MA, Essa KSM. Extrapolation of solar irradiation measurements: case study over Egypt. Renew Energy 1998;14:229–39.
[13] Gordon JM, Reddy TA. Time series analysis of hourly global horizontal solar radiation. Sol Energy 1988;41:423–9. http://dx.doi.org/10.1016/0038-092(88)90016-3.
[14] Hansen AD, Sørensen P, Hansen LH, Bindner H. Models for a stand-alone PV system. Roskilde: Riso National Laboratory; 2000. http://dx.doi.org/10.1306/74D71BC2-2B21-11D7-8648000102C1865D.
[15] Agbossou K, Kolhe M, Hamelin J, Bose TK. Performance of a stand-alone renewable energy system based on energy storage as hydrogen. IEEE Trans ENERGY Convers 2004;19:633–40.
[16] Maharjan L, Inoue S, Akagi H. A transformerless energy storage system based on a cascade multilevel PWM converter with star configuration. IEEE Trans Ind Appl 2008;44:1621–30.
[17] Sood PK, Lipo TA, Hansen IG. A versatile power converter for high frequency link systems. IEEE Trans Power Electron 1987;3:249–56.
[18] Nehrir MH, Wang C, Strunz K, Aki H, Ramakumar R, Bing J, et al. A review of hybrid renewable/alternative energy systems for electric power generation. IEEE Trans Sustain Energy 2011;2:392–403.
[19] Kahraman C, Kaya İ, Cebi S. A comparative analysis for multiattribute selection among renewable energy alternatives using fuzzy axiomatic design and fuzzy analytic hierarchy process. Energy 2009;34:1603–16. http://dx.doi.org/10.1016/j.energy.2009.07.008.
[20] Beccali M, Cellura M, Mistretta M. Decision-making in energy planning. Application of the Electre method at regional level for the diffusion of renewable energy technology. Renew. Energy 2003;28:2063–87. http://dx.doi.org/10.1016/S0960-1481(03)00102-2.
[21] Goletsis Y, Psarras J, Samouilidis JE. Project ranking in the Armenian energy sector using a multicriteria method for groups. Ann Oper Res 2003;120:135–57. http://dx.doi.org/10.1023/A:1023330530111.
[22] Topcu YI, Ulengin F. Energy for the future: an integrated decision aid for the case of Turkey. Energy 2004;29:137–54. http://dx.doi.org/10.1016/S0360-5442(03)00160-9.
[23] Ribeiro F, Ferreira P, Araújo M. Evaluating future scenarios for the power generation sector using a Multi-Criteria Decision Analysis (MCDA) tool: the Portuguese case. Energy 2013;52:126–36. http://dx.doi.org/10.1016/j.energy.2012.12.036.
[24] Diaf S, Notton G, Belhamel M, Haddadi M, Louche a. Design and techno-economical optimization for hybrid PV/wind system under various meteorological conditions. Appl Energy 2008;85:968–87. http://dx.doi.org/10.1016/j.apenergy.2008.02.012.
[25] Yang H, Wei Z, Chengzhi L. Optimal design and techno-economic analysis of a hybrid solar–wind power generation system. Appl Energy 2009;86:163–9. http://dx.doi.org/10.1016/j.apenergy.2008.03.008.
[26] Kazem HA, Khatib T, Sopian K. Sizing of a standalone photovoltaic/battery system at minimum cost for remote housing electrification in Sohar, Oman. Energy Build 2013;61:108–15. http://dx.doi.org/10.1016/j.enbuild.2013.02.011.
[27] Upadhyay S, Sharma MP. A review on configurations, control and sizing methodologies of hybrid energy systems. Renew Sustain Energy Rev 2014;38:47–63. http://dx.doi.org/10.1016/j.rser.2014.05.057.
[28] Billinton Roy. Power system reliability evaluation. 2nd ed. New York, USA: Gordon and Breach, Science Publishers, Inc.; 1982.
[29] Ardakani FJ, Riahy G, Abedi M. Optimal sizing of a grid-connected hybrid system for north-west of Iran-case study. In: Proc 9th Conf Environ Electr Eng (EEEIC 2010), Czech Republic. p. 29–32. http://dx.doi.org/10.1109/EEEIC.2010.5490006.
[30] Alsayed M, Cacciato M, Scarcella G, Scelba G. Multicriteria optimal sizing of photovoltaic-wind turbine grid connected systems. IEEE Trans Energy Convers 2013;28:370–9. http://dx.doi.org/10.1109/TEC.2013.2245669.
[31] Dufo-López R, Bernal-Agustín JL. Design and control strategies of PV-diesel systems using genetic algorithms. Sol Energy 2005;79:33–46. http://dx.doi.org/10.1016/j.solener.2004.10.004.
[32] Ekren O, Ekren BY, Celik AN. Size optimization of a PV/wind hybrid energy conversion system with battery storage using response surface methodology. Appl Energy 2003;44:1086–101. http://dx.doi.org/10.1016/S0196-8904(02)00223-6.
[33] Dufo-López R, Bernal-Agustín JL, Mendoza F. Design and economical analysis of hybrid PV-wind systems connected to the grid for the intermittent production of hydrogen. Energy Policy 2009;37:3082–95. http://dx.doi.org/10.1016/j.enpol.2009.03.059.
[34] Mohamed AF, Elarini MM, Othman AM. A new technique based on Artificial Bee Colony Algorithm for optimal sizing of stand-alone photovoltaic system. J Adv Res 2013;5:397–408. http://dx.doi.org/10.1016/j.jare.2013.06.010.
[35] Lazou AA, Papatsoris AD. Economics of photovoltaic stand-alone residential households: a case study for various European and Mediterranean locations. Sol Energy Mater Sol Cells 2000;62:411–27. http://dx.doi.org/10.1016/S0927-0248(00)00005-2.
[36] Ramakumar R, Hughes WL. Renewable energy sources and rural development in developing countries. IEEE Trans Educ 1981;24:242–51. http://dx.doi.org/10.1109/TE.1981.4321499.
[37] Yang H, Lu L, Zhou W. A novel optimization sizing model for hybrid solar-wind power generation system. Sol Energy 2007;81:76–84. http://dx.doi.org/10.1016/j.solener.2006.06.010.
[38] Stigka EK, Paravantis JA, Mihalakakou GK. Social acceptance of renewable energy sources: a review of contingent valuation applications. Renew Sustain Energy Rev 2014;32:100–6. http://dx.doi.org/10.1016/j.rser.2013.12.026.
[39] Aghaei J, Akbari M, Roosta A, Gitizadeh M, Niknam T. Integrated renewable conventional generation expansion planning using multiobjective framework. IET Gener Transm Distrib 2012;6:773–84.
[40] Masters GM. Renewable and efficient electric power systems. 2nd ed. Hoboken, NJ, USA: John Wiley & Sons, Inc.; 2013.
[41] Sidrach-de-Cardona M, Mora López L. A simple model for sizing stand alone photovoltaic systems. Sol Energy Mater Sol Cells 1998;55:199–214. http://dx.doi.org/10.1016/S0927-0248(98)00093-2.
[42] Ahmad GE. Photovoltaic-powdered rural zone family house in Egypt. Renew Energy 2002;26:379–90. http://dx.doi.org/10.1016/S0960-1481(01)00131-8.
[43] Sharma V, Colangelo A, Spagna G. Photovoltaic technology: basic concepts, sizing of a standalone photovoltaic system for domestic applications and preliminary economic analysis. Energy Convers Manage 1995;36:161–74.
[44] Bhuiyan M, Asgar M. Sizing of a stand-alone photovoltaic power system at Dhaka. Renew Energy 2003;28:929–38. http://dx.doi.org/10.1016/S0960-1481(02)00154-4.
[45] Kaushika ND, Rai AK. Solar PV design aid expert system. Sol Energy Mater Sol Cells 2006;90:2829–45. http://dx.doi.org/10.1016/j.solmat.2006.04.010.

[46] Chel A, Tiwari GN, Chandra A. Simplified method of sizing and life cycle cost assessment of building integrated photovoltaic system. Energy Build 2009;41:1172–80. http://dx.doi.org/10.1016/j.enbuild.2009.06.004.
[47] Al-salaymeh A, Al-hamamre Z, Sharaf F, Abdelkader MR. Technical and economical assessment of the utilization of photovoltaic systems in residential buildings: the case of Jordan. Energy Convers Manage 2010;51:1719–26. http://dx.doi.org/10.1016/j.enconman.2009.11.026.
[48] Egido M, Lorenzo E. The sizing of stand alone PV-system: a review and a proposed new method. Sol Energy Mater Sol Cells 1992;26:51–69. http://dx.doi.org/10.1016/0927-0248(92)90125-9.
[49] Cabral CVT, Filho DO, Diniz ASAC, Martins JH, Toledo OM, Machado Neto LDVB. A stochastic method for stand-alone photovoltaic system sizing. Sol Energy 2010;84:1628–36. http://dx.doi.org/10.1016/j.solener.2010.06.006.
[50] Kaldellis JK, Zafirakis D, Kondili E. Optimum sizing of photovoltaic-energy storage systems for autonomous small islands. Int J Electr Power Energy Syst 2010;32:24–36. http://dx.doi.org/10.1016/j.ijepes.2009.06.013.
[51] Celik A, Muneer T, Clarke P. Optimal sizing and life cycle assessment of residential photovoltaic energy systems with battery storage. Prog Photovoltaics Res Appl 2012;20:6–11. http://dx.doi.org/10.1002/pip.
[52] Chen S-G. An efficient sizing method for a stand-alone PV system in terms of the observed block extremes. Appl Energy 2012;91:375–84. http://dx.doi.org/10.1016/j.apenergy.2011.09.043.
[53] Spertino F, Di Leo P, Cocina V, Tina GM. Storage sizing procedure and experimental verification of stand-alone photovoltaic systems. In: Proceedings in the 2nd IEEE Int Energy Conf Exhib (ENERGYCON 2012), Italy. p. 464–8. http://dx.doi.org/10.1109/EnergyCon.2012.6348199.
[54] Chen S-G. Bayesian approach for optimal PV system sizing under climate change. Omega 2013;41:176–85. http://dx.doi.org/10.1016/j.omega.2011.07.013.
[55] Semaoui S, Hadj Arab A, Bacha S, Azoui B. Optimal sizing of a stand-alone photovoltaic system with energy management in isolated areas. Energy Proc 2013;36:358–68. http://dx.doi.org/10.1016/j.egypro.2013.07.041.
[56] Iii DPB. Optimal battery sizing for storm-resilient photovoltaic power island systems. Sol Energy 2014;109:165–73. http://dx.doi.org/10.1016/j.solener.2014.08.016.
[57] Khatib T, Elmenreich W. Novel simplified hourly energy flow models for photovoltaic power systems. Energy Convers Manage 2014;79:441–8. http://dx.doi.org/10.1016/j.enconman.2013.12.038.
[58] Fathi AEl, Nkhaili L, Bennouna A, Outzourhit A. Performance parameters of a standalone PV plant. Energy Convers Manage 2014;86:490–5. http://dx.doi.org/10.1016/j.enconman.2014.05.045.
[59] Dufo-lópez R, Lujano-rojas JM, Bernal-agustín JL. Comparison of different lead – acid battery lifetime prediction models for use in simulation of stand-alone photovoltaic systems. Appl Energy 2014;115:242–53. http://dx.doi.org/10.1016/j.apenergy.2013.11.021.
[60] Illanes R, Francisco ADe, Núñez F, De BlasM, García A, Luis J. Dynamic simulation and modelling of stand-alone PV systems by using state equations and numerical integration methods. Appl Energy 2014;135:440–9. http://dx.doi.org/10.1016/j.apenergy.2014.08.088.
[61] Lee M, Soto D, Modi V. Cost versus reliability sizing strategy for isolated photovoltaic micro-grids in the developing world. Renew Energy 2014;69:16–24. http://dx.doi.org/10.1016/j.renene.2014.03.019.
[62] Bouabdallah A, Olivier JC, Bourguet S, Machmoum M, Schaeffer E. Safe sizing methodology applied to a standalone photovoltaic system. Renew Energy 2015;80:266–74. http://dx.doi.org/10.1016/j.renene.2015.02.007.
[63] Erdinc O, Paterakis NG, Pappi IN, Bakirtzis AG, Catalão JPS. A new perspective for sizing of distributed generation and energy storage for smart households under demand response. Appl Energy 2015;143:26–37. http://dx.doi.org/10.1016/j.apenergy.2015.01.025.
[64] Mandelli S, Brivio C, Colombo E, Merlo M. A sizing methodology based on levelized cost of supplied and lost energy for off-grid rural electrification systems loss of load loss of load probability. Renew Energy 2016;89:475–88. http://dx.doi.org/10.1016/j.renene.2015.12.032.
[65] Nordin ND, Rahman HA. A novel optimization method for designing stand alone photovoltaic system. Renew Energy 2016;89:706–15. http://dx.doi.org/10.1016/j.renene.2015.12.001.
[66] Ibrahim IA, Mohamed A, Khatib T. Optimal modeling and sizing of a practical standalone PV/Battery generation system using numerical algorithm. In: IEEE Student Conf Res Dev, Malaysia. p. 43–8. http://dx.doi.org/10.1109/SCORED.2015.7449372.
[67] Ibrahim IA, Mohamed A, Khatib T. Modeling of photovoltaic array using random forests technique. In: 2015 IEEE Conf Energy Convers. Malaysia: IEEE; 2015. p. 390–3. http://dx.doi.org/10.1109/CENCON.2015.7409575.
[68] Markvart T, Fragaki A, Ross JN. PV system sizing using observed time series of solar radiation. Sol Energy 2006;80:46–50. http://dx.doi.org/10.1016/j.solener.2005.08.011.
[69] Jakhrani AQ, Othman A-K, Rigit ARH, Samo SR, Kamboh SA. A novel analytical model for optimal sizing of standalone photovoltaic systems. Energy 2012;46:678–82.
[70] Khatib T, Mohamed A, Sopian K, Mahmoud M. A new approach for optimal sizing of standalone photovoltaic systems. Int J Photoenergy 2012;2012:1–7. http://dx.doi.org/10.1155/2012/391213.
[71] Bortolini M, Gamberi M, Graziani A. Technical and economic design of photovoltaic and battery energy storage system. Energy Convers Manage 2014;86:81–92. http://dx.doi.org/10.1016/j.enconman.2014.04.089.
[72] AL Riza DF, Gilani SIUH, Aris MS. Standalone photovoltaic systems sizing optimization using design space approach: case study for residential lighting load. J Eng Sci Technol 2015;10:943–57.
[73] Sinha S, Chandel SS. Review of software tools for hybrid renewable energy systems. Renew Sustain Energy Rev 2014;32:192–205. http://dx.doi.org/10.1016/j.rser.2014.01.035.
[74] Connolly D, Lund H, Mathiesen BV, Leahy M. A review of computer tools for analysing the integration of renewable energy into various energy systems. Appl Energy 2010;87:1059–82. http://dx.doi.org/10.1016/j.apenergy.2009.09.026.
[75] Khatib T, Mohamed A, Sopian K. A software tool for optimal sizing of PV systems in Malaysia. Model Simul Eng 2012;2012:1–11. http://dx.doi.org/10.1155/2012/969248.
[76] Bentouba S, Slimani A, Boucherit MS, Bourouis M, Coronas A. Analysis of photovoltaic power system in remote area in Adrar south of Algeria. Int Rev Mech Eng 2010;4:460–5.
[77] Khatib T, Elmenreich W. Optimum availability of standalone photovoltaic power systems for remote housing electrification. Int J Photoenergy 2014;2014.
[78] Salam MA, Aziz A, Alwaeli AHA, Kazem HA. Optimal sizing of photovoltaic systems using HOMER for Sohar, Oman. Int J Renew Energy Res 2013;3:301–7.
[79] Türkay BE, Telli AY. Economic analysis of standalone and grid connected hybrid energy systems. Renew Energy 2011;36:1931–43. http://dx.doi.org/10.1016/j.renene.2010.12.007.
[80] Al-Karaghouli A, Kazmerski LL. Optimization and life-cycle cost of health clinic PV system for a rural area in southern Iraq using HOMER software. Sol Energy 2010;84:710–4. http://dx.doi.org/10.1016/j.solener.2010.01.024.
[81] Chauhan A, Saini RP. Techno-economic optimization based approach for energy management of a stand-alone integrated renewable energy system for remote areas of India. Energy 2016;94:138–56. http://dx.doi.org/10.1016/j.energy.2015.10.136.
[82] Carroquino J, Dufo-l R. Sizing of off-grid renewable energy systems for drip irrigation in Mediterranean crops 2015; 76: 566–74. http://dx.doi.org/10.1016/j.renene.2014.11.069.
[83] EL-Shimy M. Viability analysis of PV power plants in Egypt. Renew Energy 2009;34:2187–96. http://dx.doi.org/10.1016/j.renene.2009.01.010.
[84] Albadi MH, Al-Badi AH, Al-Lawati AM, Malik AS. Cost of PV electricity in Oman. In: 2011 IEEE GCC Conf Exhib GCC, vol. 36; 2011. p. 373–6. http://dx.doi.org/10.1109/IEEEGCC.2011.5752548.
[85] Bakos GC, Soursos M, Tsagas NF. Technoeconomic assessment of a building-integrated PV system for electrical energy saving in residential sector. Energy Build 2003;35:757–62. http://dx.doi.org/10.1016/S0378-7788(02)00229-3.
[86] Zeiner I, Suul JA, Marcos A, Molinas M. System design and load profile shaping for a reverse osmosis desalination plant powered by a stand-alone PV system in Pozo Colorado Paraguay. In: Ninth Int Conf Ecol Veh Renew Energies.
[87] Khatib T, Elmenreich W. An improved method for sizing standalone photovoltaic systems using generalized regression neural network. Int J Photoenergy 2014;2014.
[88] Yoza A, Yona A, Senjyu T, Funabashi T. Optimal capacity and expansion planning methodology of PV and battery in smart house. Renew Energy 2014;69:25–33. http://dx.doi.org/10.1016/j.renene.2014.03.030.
[89] Salah C Ben, Lamamra K, Fatnassi A. New optimally technical sizing procedure of domestic photovoltaic panel/battery system. J Renew Sustain Energy 2015;7:1–14.
[90] Zhao B, Zhang X, Li P, Wang K, Xue M, Wang C. Optimal sizing, operating strategy and operational experience of a stand-alone microgrid on Dongfushan Island. Appl Energy 2014;113:1656–66. http://dx.doi.org/10.1016/j.apenergy.2013.09.015.
[91] Makhloufi S. Comparative study between classical methods and genetic algorithms for sizing remote PV systems. Int J Energy Environ Eng 2015;6:221–31. http://dx.doi.org/10.1007/s40095-015-0170-4.
[92] Mellit A. ANN-based GA for generating the sizing curve of stand-alone photovoltaic systems. Adv Eng Softw 2010;41:687–93. http://dx.doi.org/10.1016/j.advengsoft.2009.12.008.
[93] Mellit A, Kalogirou SA, Drif M. Application of neural networks and genetic algorithms for sizing of photovoltaic systems. Renew Energy 2010;35:2881–93. http://dx.doi.org/10.1016/j.renene.2010.04.017.
[94] Nikhil PG, Subhakar D. Sizing and parametric analysis of a stand-alone photovoltaic power plant. Photovoltaics IEEE J 2013;3:776–84. http://dx.doi.org/10.1109/JPHOTOV.2013.2247792.
[95] Esfahani IJ, Yoo C. An optimization algorithm-based pinch analysis and GA for an off-grid batteryless photovoltaic-powered reverse osmosis desalination system. Renew Energy 2016;91:233–48. http://dx.doi.org/10.1016/j.renene.2016.01.049.